Item # _____

Quantity _____

C.S.I. Section 11400

HOBART
701 S Ridge Avenue, Troy, OH 45374
1-888-4HOBART • www.hobartcorp.com

LXGeR and LXGePR advansys GLASSWASHER

STANDARD FEATURES

- Racks per hour

	Light	Normal
LXGeR	30	24
LXGePR	38	29

- .62 gallons of water per rack – LXGeR
  1.14 gallons of water per rack – LXGePR
- Hot water or chemical sanitation units available
- Steam Elimination and Energy Recovery (LXGeR model only)
- PuriRinse cycle (Potable water rinse to remove chemical residue) (LXGePR model only)
- Low chemical alert indicators
- Sense-A-Temp™ booster heater capable of 70 rise, provided on LXGeR models
- Chemical pump "auto-prime"
- Advanced Service diagnostics
- Clogged wash arm sensing
- Custom cycle selection – light, normal
- Automated delime cycle – includes booster deliming
- Deep drawn stainless steel tank
- Microcomputer, top mounted controls with advanced digital cycle/temperature display
- Revolving upper and lower anti-clogging wash arms
- Snap-in revolving upper and lower rinse arms
- Removable stainless steel scrap screen
- Corrosion resistant pump
- Energy Saver mode
- Automatic pumped drain
- 12" door opening
- Dirty water indicator
- Automatic fill
- Detergent, rinse aid and delime pumps standard (plus sanitizer pump on chemical machine)
- Electric tank heat
- One dishrack – one glass/wine rack
- Customizable "advansys" button to select favorites function
- Auto clean cycle washes down inside of machine at shutdown

MODELS

- ❑ LXGeR – Energy Recovery
- ❑ LXGePR – PuriRinse

STANDARD VOLTAGES

- ❑ 120/208-240(3W)/60/1 (LXGeR model only)
- ❑ 120/60/1 (LXGePR model only)

ACCESSORIES

- ❑ Power cord kits
- ❑ DWT-LXe drain water tempering kit

Specifications, Details and Dimensions on Back.

HOBART
LXGeR and LXGePR advansys GLASSWASHER

LXGeR SHORT
advansys GLASSWASHER

HOBART
701 S Ridge Avenue, Troy, OH 45374
1-888-4HOBART • www.hobartcorp.com

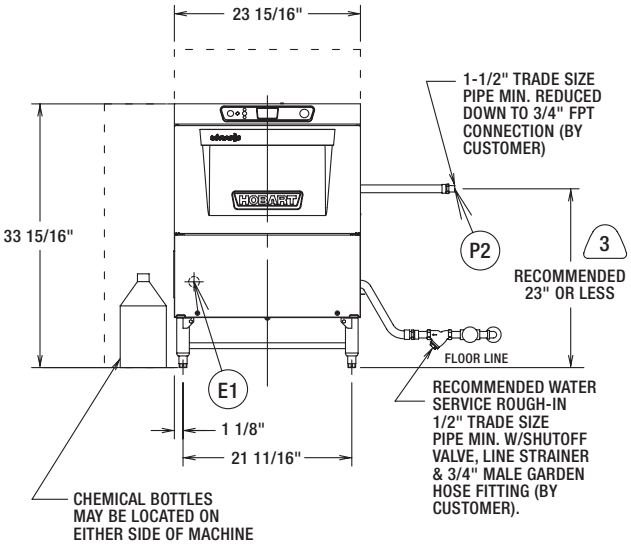

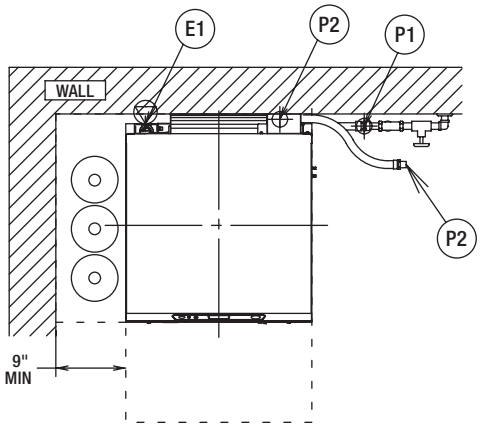

⚠ WARNING

Do not premix other chemicals and sodium hypochlorite (liquid bleach). Mixing may cause hazardous gas to form.

NOTICE

Required flowing water pressure to the dishmachine is 15-65 PSIG. If pressures higher than 65 PSIG are present, a pressure regulating valve must be installed in the water line to the dishmachine (by others).

Pressure gauge not required on pumped rinse machines.

Important: The chemical containers should be placed no higher than 16" above floor.

If chemical containers are to be placed in cabinet adjacent to machine, a 1/2" dia. hole is required in the cabinet to run chemical supply line.

Notes:

1. All vertical machine dimensions taken from floor may be increased by .875" or decreased by .375".
2. Moist air escapes from the door. Use only moisture resistant materials adjacent to dishmachine sides and top.
3. A vent hood is not recommended above the undercounter dishmachine since it does not produce excessive vapors.

Plumbing notes:

1. Water hammer arrestor (meeting ASSE-1010 Standard or equivalent) to be supplied (by others) in common water supply line at service connection.
2. Recommended water hardness to be 3 grains or less for best results.
3. If drain hose is looped above a sink, the loop must not exceed 44" AFF.

CONNECTION INFORMATION
(AFF = ABOVE FINISHED FLOOR)

LEGEND

E1 ELECTRICAL CONNECTION: 1-3/8" DIA. HOLE FOR 1" TRADE SIZE CONDUIT; 10-5/8" AFF.

P1 SINGLE FILL AND RINSE CONNECTION: 3/4" FEMALE GARDEN HOSE FITTING ON 6' LONG HOSE SUPPLIED WITH MACHINE.; 55-85°F (COLD) RECOMMENDED FOR LXGeR.

P2 DRAIN CONNECTION: 5/8" BARB FITTING WITH 6' LONG HOSE SUPPLIED WITH MACHINE.

⚠ WARNING

Electrical and grounding connections must comply with the applicable portions of the National Electrical Code and/or other local electrical codes.

Plumbing connections must comply with applicable sanitary, safety and plumbing codes. Drain and fill line configurations vary, some methods are shown on this drawing.

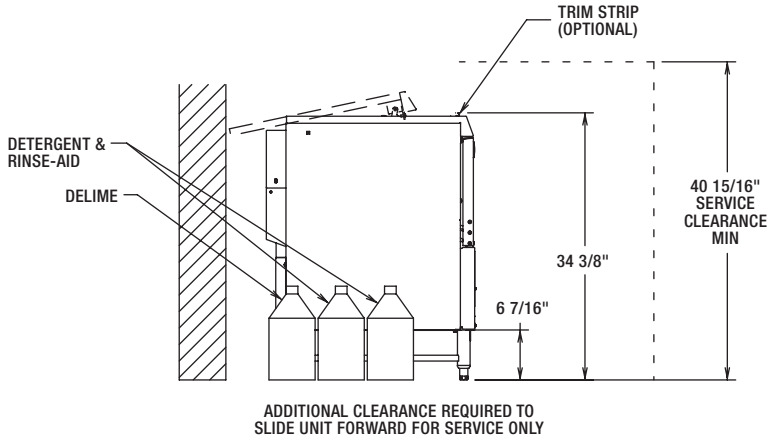

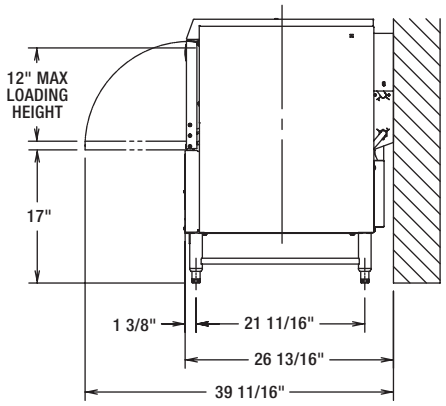

HEAT OUTPUT, BTU/HR		
MODEL	LATENT	SENSIBLE
LXGeR	1100	2000

SHIPPING WEIGHTS	LXGeR
NET WEIGHT OF MACHINE	165 LBS
DOMESTIC SHIPPING WEIGHT	185 LBS

MODEL	VOLTS/HERTZ/PHASE	RATED AMPS	MIN SUPPLY CKT CONDUCTOR AMPACITY	MAX PROTECTIVE DEVICE
LXGeR	120/208-240(3W)/60/1*	30.5	40	40

NOTE: FOR SUPPLY CONNECTIONS, USE COPPER WIRE ONLY RATED AT 90°C MINIMUM.

*THIS SYSTEM REQUIRES THREE POWER WIRES WHICH INCLUDES A CURRENT CARRYING NEUTRAL, AN ADDITIONAL FOURTH WIRE MUST BE PROVIDED FOR MACHINE GROUND.

ACCESSORY CORD KIT AVAILABLE FOR ALL MACHINES

MODELS:
LXGeR SHORT
00-950418
REV B

HOBART
701 S Ridge Avenue, Troy, OH 45374
1-888-4HOBART • www.hobartcorp.com

LXGeR TALL advansys GLASSWASHER

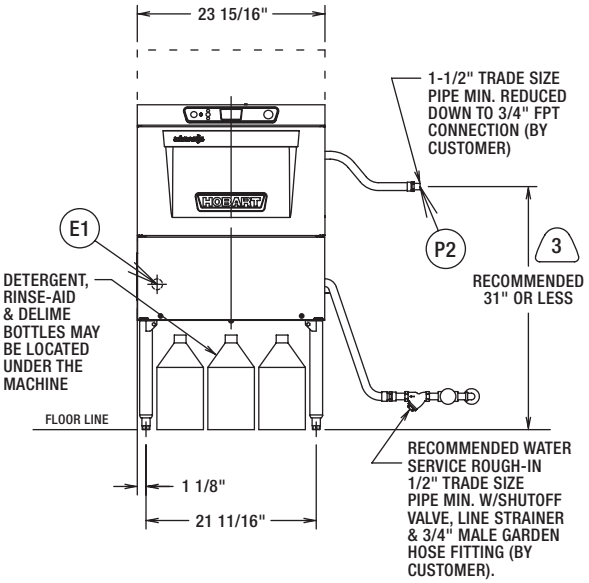

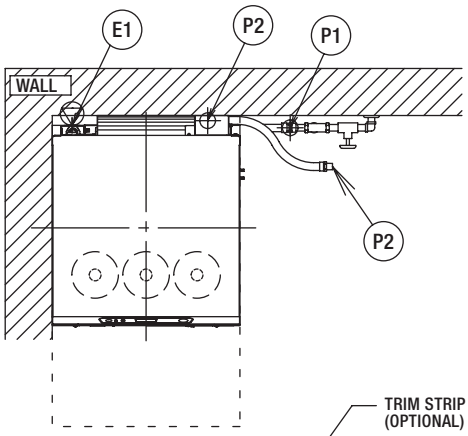

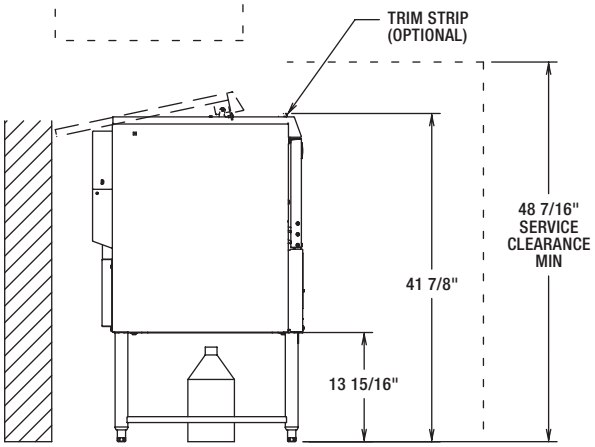

ADDITIONAL CLEARANCE REQUIRED TO SLIDE UNIT FORWARD FOR SERVICE ONLY

⚠ WARNING

Do not premix other chemicals and sodium hypochlorite (liquid bleach). Mixing may cause hazardous gas to form.

NOTICE

Required flowing water pressure to the dishmachine is 15-65 PSIG. If pressures higher than 65 PSIG are present, a pressure regulating valve must be installed in the water line to the dishmachine (by others).

Pressure gauge not required on pumped rinse machines.

Important: The chemical containers should be placed no higher than 24" above floor.

If chemical containers are to be placed in cabinet adjacent to machine, a 1/2" dia. hole is required in the cabinet to run chemical supply line.

Notes:

1. All vertical machine dimensions taken from floor may be increased by .875" or decreased by .375".
2. Moist air escapes from the door. Use only moisture resistant materials adjacent to dishmachine sides and top.
3. A vent hood is not recommended above the undercounter dishmachine since it does not produce excessive vapors.

Plumbing notes:

1. Water hammer arrestor (meeting ASSE-1010 Standard or equivalent) to be supplied (by others) in common water supply line at service connection.
2. Recommended water hardness to be 3 grains or less for best results.
3. If drain hose is looped above a sink, the loop must not exceed 51" AFF.

CONNECTION INFORMATION
(AFF = ABOVE FINISHED FLOOR)

LEGEND

E1 ELECTRICAL CONNECTION: 1-3/8" DIA. HOLE FOR 1" TRADE SIZE CONDUIT; 18-1/8" AFF.

P1 SINGLE FILL AND RINSE CONNECTION: 3/4" FEMALE GARDEN HOSE FITTING ON 6' LONG HOSE SUPPLIED WITH MACHINE.; 55-85°F (COLD) RECOMMENDED FOR LXGeR.

P2 DRAIN CONNECTION: 5/8" BARB FITTING WITH 6' LONG HOSE SUPPLIED WITH MACHINE.

⚠ WARNING

Electrical and grounding connections must comply with the applicable portions of the National Electrical Code and/or other local electrical codes.

Plumbing connections must comply with applicable sanitary, safety and plumbing codes. Drain and fill line configurations vary, some methods are shown on this drawing.

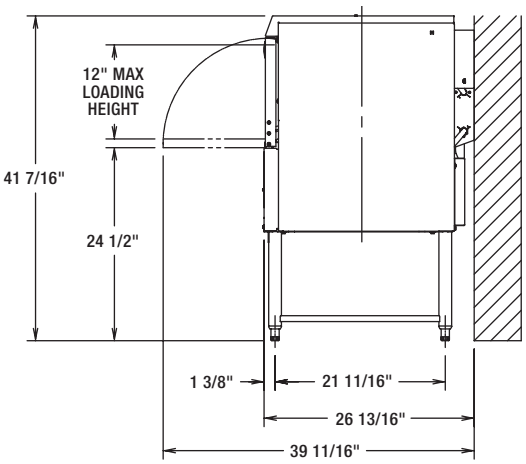

HEAT OUTPUT, BTU/HR		
MODEL	LATENT	SENSIBLE
LXGeR	1100	2000

SHIPPING WEIGHTS	LXGeR
NET WEIGHT OF MACHINE	165 LBS
DOMESTIC SHIPPING WEIGHT	185 LBS

MODEL	VOLTS/HERTZ/PHASE	RATED AMPS	MIN SUPPLY CKT CONDUCTOR AMPACITY	MAX PROTECTIVE DEVICE
LXGeR	120/208-240(3W)/60/1*	30.5	40	40

NOTE: FOR SUPPLY CONNECTIONS, USE COPPER WIRE ONLY RATED AT 90°C MINIMUM.

*THIS SYSTEM REQUIRES THREE POWER WIRES WHICH INCLUDES A CURRENT CARRYING NEUTRAL, AN ADDITIONAL FOURTH WIRE MUST BE PROVIDED FOR MACHINE GROUND.

ACCESSORY CORD KIT AVAILABLE FOR ALL MACHINES

MODELS:
LXGeR TALL
00-950418
REV B

LXGePR SHORT
advansys GLASSWASHER

HOBART
701 S Ridge Avenue, Troy, OH 45374
1-888-4HOBART • www.hobartcorp.com

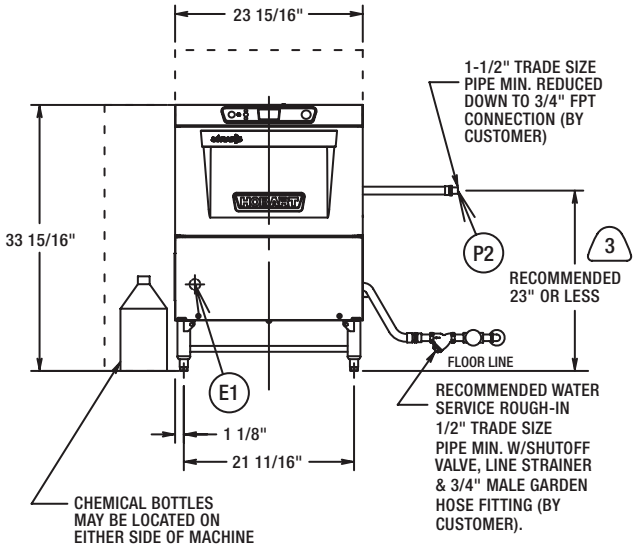

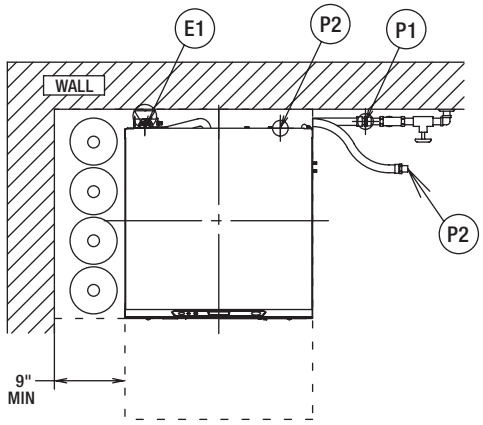

⚠ WARNING

Do not premix other chemicals and sodium hypochlorite (liquid bleach). Mixing may cause hazardous gas to form.

NOTICE

Required flowing water pressure to the dishmachine is 15-65 PSIG. If pressures higher than 65 PSIG are present, a pressure regulating valve must be installed in the water line to the dishmachine (by others).

Pressure gauge not required on pumped rinse machines.

Important: The chemical containers should be placed no higher than 16" above floor.

If chemical containers are to be placed in cabinet adjacent to machine, a 1/2" dia. hole is required in the cabinet to run chemical supply line.

Use only 6% or 8.4% sodium hypochlorite (liquid bleach) as sanitizing chemical to insure proper operation of dishmachine.

Certain materials including silver plate, aluminum and pewter are attacked by sodium hypochlorite (liquid bleach). See instructional manual.

Notes:

1. All vertical machine dimensions taken from floor may be increased by .875" or decreased by .375".
2. Moist air escapes from the door.
   Use only moisture resistant materials adjacent to dishmachine sides and top.
3. A vent hood is not recommended above the undercounter dishmachine since it does not produce excessive vapors.

Plumbing notes:

1. Water hammer arrestor (meeting ASSE-1010 Standard or equivalent) to be supplied (by others) in common water supply line at service connection.
2. Recommended water hardness to be 3 grains or less for best results.
3. If drain hose is looped above a sink, the loop must not exceed 44" AFF.

CONNECTION INFORMATION
(AFF = ABOVE FINISHED FLOOR)

LEGEND

E1 ELECTRICAL CONNECTION: 1-3/8" DIA. HOLE FOR 1" TRADE SIZE CONDUIT; 10-5/8" AFF.

P1 SINGLE FILL AND RINSE CONNECTION: 3/4" FEMALE GARDEN HOSE FITTING ON 6' LONG HOSE SUPPLIED WITH MACHINE.;
120°F WATER MIN. FOR LXGePR, 140°F RECOMMENDED.

P2 DRAIN CONNECTION: 5/8" BARB FITTING WITH 6' LONG HOSE SUPPLIED WITH MACHINE.

⚠ WARNING

Electrical and grounding connections must comply with the applicable portions of the National Electrical Code and/or other local electrical codes.

Plumbing connections must comply with applicable sanitary, safety and plumbing codes. Drain and fill line configurations vary, some methods are shown on this drawing.

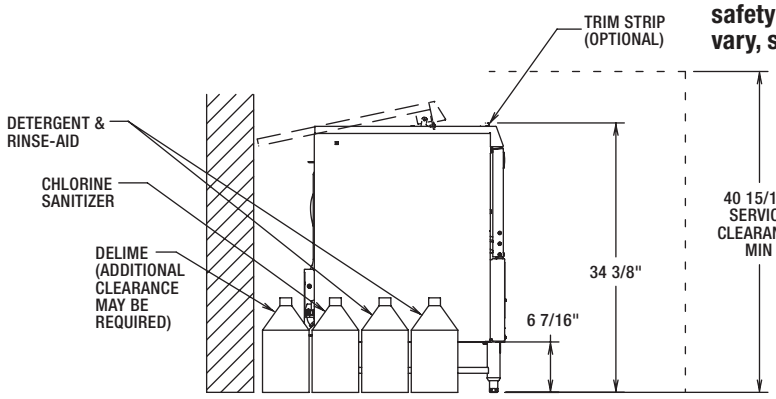

ADDITIONAL CLEARANCE REQUIRED TO SLIDE UNIT FORWARD FOR SERVICE ONLY

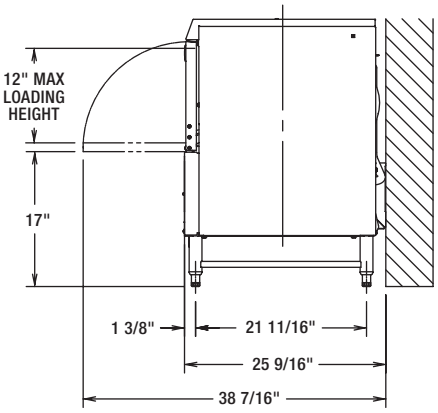

HEAT OUTPUT, BTU/HR		
MODEL	LATENT	SENSIBLE
LXGePR	1900	800

SHIPPING WEIGHTS	LXGePR
NET WEIGHT OF MACHINE	150 LBS
DOMESTIC SHIPPING WEIGHT	170 LBS

MODEL	VOLTS/HERTZ/PHASE	RATED AMPS	MIN SUPPLY CKT CONDUCTOR AMPACITY	MAX PROTECTIVE DEVICE
LXGePR	120/60/1	15.4	20	20

NOTE: FOR SUPPLY CONNECTIONS, USE COPPER WIRE ONLY RATED AT 90°C MINIMUM.

ACCESSORY CORD KIT AVAILABLE FOR ALL MACHINES

MODELS:
LXGePR SHORT
00-950419
REV B

HOBART
701 S Ridge Avenue, Troy, OH 45374
1-888-4HOBART • www.hobartcorp.com

LXGePR TALL advansys GLASSWASHER

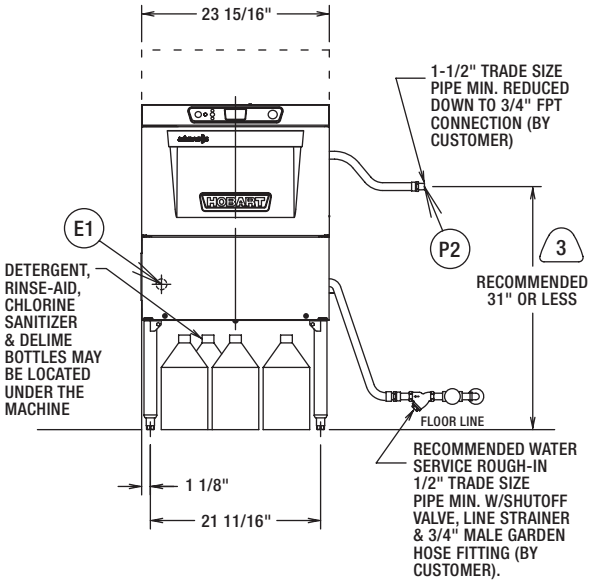

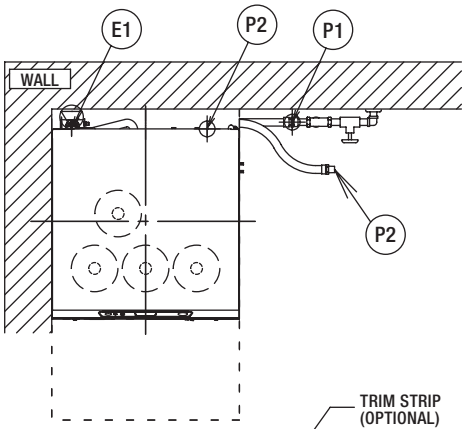

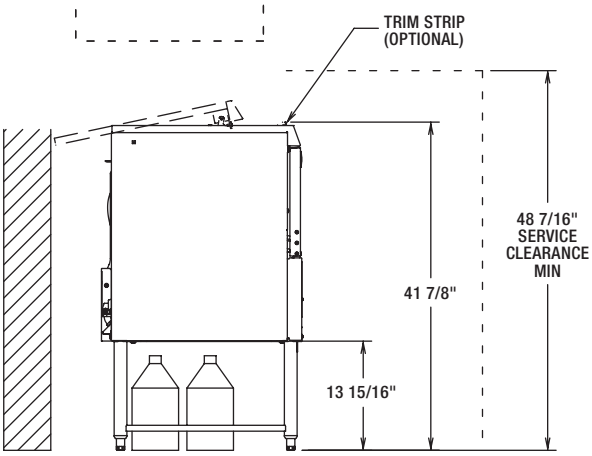

ADDITIONAL CLEARANCE REQUIRED TO SLIDE UNIT FORWARD FOR SERVICE ONLY

⚠ WARNING

Do not premix other chemicals and sodium hypochlorite (liquid bleach). Mixing may cause hazardous gas to form.

NOTICE

Required flowing water pressure to the dishmachine is 15-65 PSIG. If pressures higher than 65 PSIG are present, a pressure regulating valve must be installed in the water line to the dishmachine (by others).

Pressure gauge not required on pumped rinse machines.

Important: The chemical containers should be placed no higher than 24" above floor.

If chemical containers are to be placed in cabinet adjacent to machine, a 1/2" dia. hole is required in the cabinet to run chemical supply line.

Use only 6% or 8.4% sodium hypochlorite (liquid bleach) as sanitizing chemical to insure proper operation of dishmachine.

Certain materials including silver plate, aluminum and pewter are attacked by sodium hypochlorite (liquid bleach). See instructional manual.

Notes:

1. All vertical machine dimensions taken from floor may be increased by .875" or decreased by .375".
2. Moist air escapes from the door.
   Use only moisture resistant materials adjacent to dishmachine sides and top.
3. A vent hood is not recommended above the undercounter dishmachine since it does not produce excessive vapors.

Plumbing notes:

1. Water hammer arrestor (meeting ASSE-1010 Standard or equivalent) to be supplied (by others) in common water supply line at service connection.
2. Recommended water hardness to be 3 grains or less for best results.
3. If drain hose is looped above a sink, the loop must not exceed 51" AFF.

CONNECTION INFORMATION
(AFF = ABOVE FINISHED FLOOR)

LEGEND

E1 ELECTRICAL CONNECTION: 1-3/8" DIA. HOLE FOR 1" TRADE SIZE CONDUIT; 18-1/8" AFF.

P1 SINGLE FILL AND RINSE CONNECTION: 3/4" FEMALE GARDEN HOSE FITTING ON 6' LONG HOSE SUPPLIED WITH MACHINE.;
120°F WATER MIN. FOR LXGePR, 140°F RECOMMENDED.

P2 DRAIN CONNECTION: 5/8" BARB FITTING WITH 6' LONG HOSE SUPPLIED WITH MACHINE.

⚠ WARNING

Electrical and grounding connections must comply with the applicable portions of the National Electrical Code and/or other local electrical codes.

Plumbing connections must comply with applicable sanitary, safety and plumbing codes. Drain and fill line configurations vary, some methods are shown on this drawing.

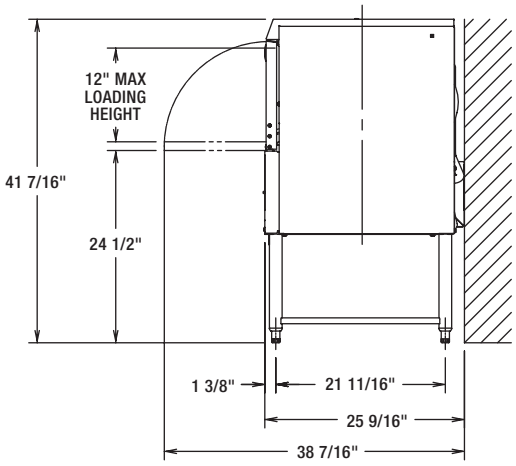

HEAT OUTPUT, BTU/HR		
MODEL	LATENT	SENSIBLE
LXGePR	1900	800

SHIPPING WEIGHTS	LXGePR
NET WEIGHT OF MACHINE	150 LBS
DOMESTIC SHIPPING WEIGHT	170 LBS

MODEL	VOLTS/HERTZ/PHASE	RATED AMPS	MIN SUPPLY CKT CONDUCTOR AMPACITY	MAX PROTECTIVE DEVICE
LXGePR	120/60/1	15.4	20	20

NOTE: FOR SUPPLY CONNECTIONS, USE COPPER WIRE ONLY RATED AT 90°C MINIMUM.

ACCESSORY CORD KIT AVAILABLE FOR ALL MACHINES

MODELS:
LXGePR TALL
00-950419
REV B

HOBART
701 S Ridge Avenue, Troy, OH 45374
1-888-4HOBART • www.hobartcorp.com

SPECIFICATIONS

DESIGN: Front opening, equipped for installation in either freestanding or undercounter-type operations.

CONSTRUCTION: 300 series stainless steel tank, door and top panel.

PUMP: Centrifugal-type, integral with motor, horizontally mounted. Pump capacity 38 gpm.

MOTOR: Single phase, furnished for all electrical specifications. Factory sealed lubrication. Inherent overload protection with auto reset.

WASH AND RINSE CYCLE: Complete automatic type, controlled by solid-state electronics. Cycle may be interrupted any time by opening door. Cycle continues when door is closed.

- Initial cycle fills wash tank, to be recirculated each wash cycle. Some wash water is drained off before rinse cycle. Rinse cycle refreshes wash water and tank heat.

RINSE PUMP: Powered by a single phase motor, the rinse pump is made of high strength engineered composite material.

BLOWER: The blower is a 60mm x 300mm tangential wheel powered by a 2-pole single phase motor for quiet and reliable operation, LXGeR only.

CONDENSER COIL: The condensing system uses a tube and fin coil constructed of copper and corrosion resistant aluminum. The condenser coil allows for energy recovery from waste heat in the moisture laden air that would normally escape into the environment after a dishwashing cycle, LXGeR only.

RINSE AND SANITATION:

- **LXGeR:** Sanitation is accomplished by means of a built-in booster heater designed to raise temperature of water to a minimum of 180°F from an incoming water temperature of 55°F.
- **LXGePR:** Sanitation is accomplished by injection of proper amount of sodium hypochlorite solution (liquid bleach) into final rinse water to achieve a minimum of 50PPM sanitizing solution. Injection of sodium hypochlorite is accomplished by a built-in sanitizing chemical pump. Minimum required hot water temperature is 120°F.
  - Potable water rinse to remove chemical residue.
  - To be used with sanitizer approved for use with post sanitizing rinse
- **CHECK SANITIZER CONCENTRATION:** PuriRinse must be off (hold Wash button for 5 seconds). Verify that there is sufficient chemical supply. Run cycle and use test strips on wetted surface of glasses after cycle is complete. If concentration is below minimum required, contact your local Hobart Service office.

ENERGY RECOVERY: Heat energy is recovered from the condensation of vapors in the chamber at the end of each cycle. This pre-heats the water for the next rinse cycle from 55°F up to 140°F.

PUMPED DRAIN: Machine automatically drains water through a built-in pump. Maximum 38" drain height permitted.

ELECTRIC BOOSTER HEATER: 4.9 KW electric booster with Sense-A-Temp™ technology adequately sized to raise 55°F inlet water to 180°F, with the aid of the energy recovery system.

RACKING: Machines accommodate racks from 10" x 20" to 20" x 20".

NOTE: Certain materials, including silver, aluminum and pewter are attacked by Sodium Hypochlorite solution in the chemical sanitizing mode of operation.

SPECIFICATIONS: Listed by Underwriters Laboratories Inc. and NSF International.

MACHINE RATINGS	LXGePR		LXGeR	
	Light	Normal	Light	Normal
Racks per Hour Rate	38	29	30	24
Dishes per Hour (25 per Rack Avg.)	950	725	750	600
Glasses per Hour (36 per Rack Avg.)	1368	1044	1080	864
Controls	Microcomputer			
Tank Capacity - Gallons	2.9			
Overall Dimensions - H x W x D (Short)	34 3/8" x 23 15/16" x 25 9/16"		34 3/8" x 23 15/16" x 26 13/16"	
Overall Dimensions - H x W x D (Tall)	41 7/8" x 23 15/16" x 25 9/16"		41 7/8" x 23 15/16" x 26 13/16"	
Cycle Time - Seconds	94	124	120	146
Tank Heat	1.8 KW			
Electric Booster Heater	N/A		4.9 KW	
Water Usage Per Rack - Gallons	1.14		.62	
Drain Design	Pumped			
Door Opening Height	12"			
Detergent Pump	Standard			
Rinse-Aid Pump	Standard			
Delime Pump	Standard			
Sanitizer Pump	Standard		N/A	
Chemical Prime (auto prime)	Standard			
Peak Drain Flow - GPM	4.0			
Advanced Service Diagnostics	Standard			
Advanced Cleaning Cycle	Standard			
70°Rise Sense-A-Temp™ Booster Heater	N/A		Standard	
Incoming Water Temperature Required (minimum)	120°		55°	

HOBART
701 S Ridge Avenue, Troy, OH 45374
1-888-4HOBART • www.hobartcorp.com

As continued product improvement is a policy of Hobart, specifications are subject to change without notice.