BABAK
FOOD EQUIPMENT

We Stand Behind What We Sell
Tel : 604-566-9745 , 604-566-9747 Fax : 604-566-9748
Email : babakfoodequipment@gmail.com
Website : www.babakfoodequipment.com

MODELS:
ATTG-24 / ATTG-36 / ATTG-48

Thermostatic Griddles

ATTG-24

Standard Features

- Stainless steel exterior & interior
- Stainless steel grease drawer
- Heavy duty 1” thick polished steel griddle plate
- 25,000 BTU burners per 12” section with standby pilots
- Independent manual controls for each 12” section
- Stainless steel legs standard
- 3/4” NPT rear gas connection and regulator standard

ATTG-36

ATTG-48

BABAK
FOOD EQUIPMENT

We Stand Behind What We Sell
Tel : 604-566-9745 , 604-566-9747 Fax : 604-566-9748
Email : babakfoodequipment@gmail.com
Website : www.babakfoodequipment.com

SPECIFICATIONS

Models	Burners and Control Method	Gas Type	Intake-tube Pressusre (in.W.C.)	Per BTU B.T.U./h	Total BTU B.T.U./h	Regulator	Work Area (inch)	Exterior Dimensions (inch)	Net Weight (lbs)	Gross Weight (lbs)
ATTG-24	2 Burners, Independent Manual Control	NG	4	25,000	50,000	4” w.c.	$23^{9/10}\times19^{9/10}$	$24\times28^{3/5}\times15^{1/5}$	161	195
		LP	10	25,000	50,000	10” w.c.				
ATTG-36	3 Burners, Independent Manual Control	NG	4	25,000	75,000	4” w.c.	$35^{7/10}\times19^{9/10}$	$36\times28^{3/5}\times15^{1/5}$	229	281
		LP	10	25,000	75,000	10” w.c.				
ATTG-48	4 Burners, Independent Manual Control	NG	4	25,000	100,000	4” w.c.	$47^{9/10}\times19^{9/10}$	$48\times28^{3/5}\times15^{1/5}$	295	415
		LP	10	25,000	100,000	10” w.c.				

PLAN VIEW

ATTG-24 **ATTG-36** **ATTG-48**

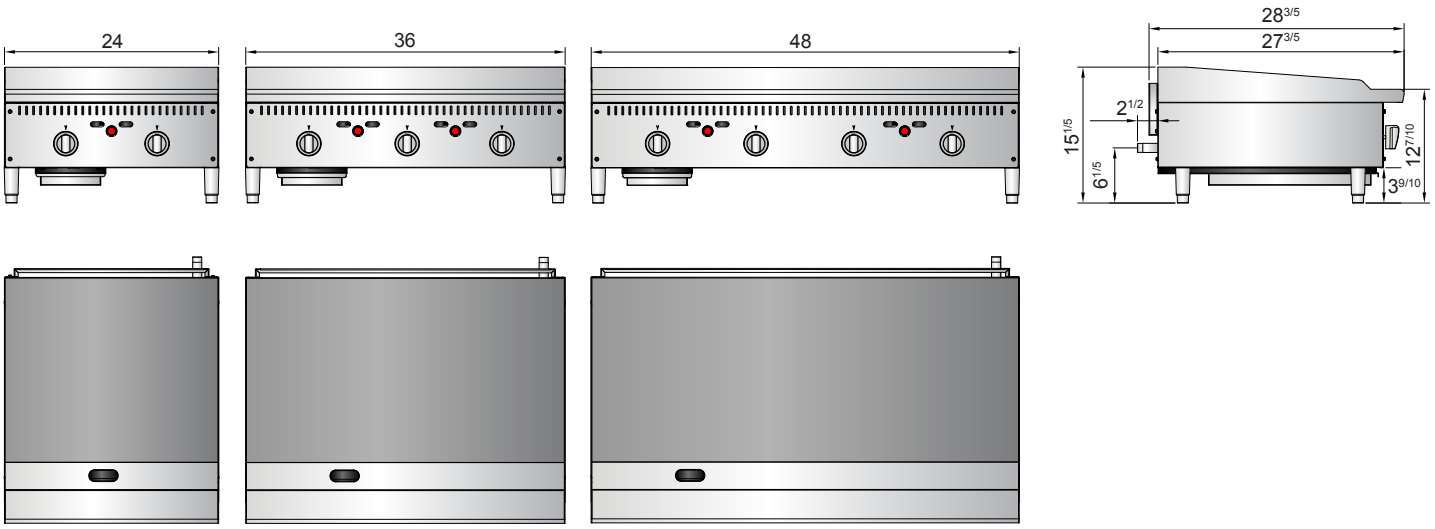
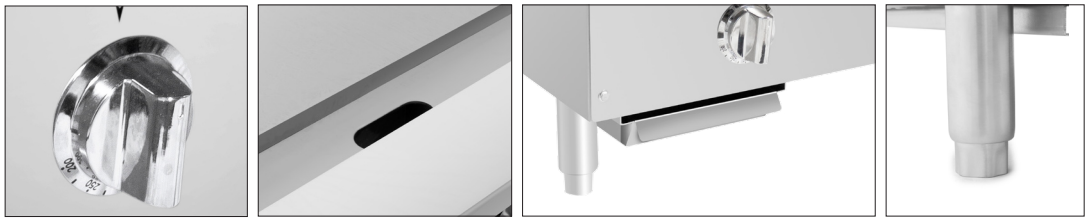
Stainless steel knobs Dripping hole Dripping pan Stainless steel legs