XAVC-0621-EPRM.3

English	Technical data
01 Power	14.5 - 19 kW | 49474 - 64828 BTU/h
02 Frequency	50 / 60 Hz
03 Electric nominal heat input	13.8 - 18.3 kW | 47086 - 62440 BTU/h
06 Power supply cable type	Cu 90°C Only
07 Voltage Power cable section Circuit breaker	240V ~3PH+PE 4 x AWG 6 Recommended size - Observe local ordinances 60 A I1 44 A I2 47 A I3 47 A 240V ~1PH+PE 3 x AWG 2 Recommended size - Observe local ordinances 90 A I1 80 A In 80 A 208V ~3PH+PE 4 x AWG 8 Recommended size - Observe local ordinances 50 A I1 38.5 A I2 41.5 A I3 41.5 A 208V ~1PH+PE 3 x AWG 3 Recommended size - Observe local ordinances 80 A I1 70 A In 70 A
08 Cable | Plug | El. Conn. mode	No | X | Permanently Connected
09 RCD / GFCI	AC
11 Water pressure	150-600 kPa | 22-87 psi
12 Water max. consumption (steam)	14.5 l/h @ 200 kPa | 3.83 gal/h @ 29 psi
13 Cavity dimensions (w x d x h)	716 x 725 x 560 mm 28-3/16" x 28-9/16" x 22-1/16"
14 Max. food load	60 kg | 132 lbs
15 Max. temperature	260 °C | 500 °F
16 IP protection class	IPX4

Terms and conditions of installations - Observe all local specific standard and regulations for installation and operations.

Italiano
01 Potenza
02 Frequenza
03 Potenza termica nominale elettrica
06 Tipo cavo alimentazione
07 Tensione Sezione cavi alimentazione Magnetotermico
08 Cavo | Spina | Modalità connessione elettrica
09 RCD / GFCI
11 Pressione acqua
12 Consumo max acqua (vapore)
13 Dimensioni camera cottura (l x p x h)
14 Max. peso pieno carico
15 Temperatura max.
16 Grado protezione IP

Espanol
01 Potencia
02 Frecuencia
03 Potencia térmica nominal eléctrica
06 Tipo de cable de alimentación
07 Voltaje Sección del cable de alimentación Disyuntor
08 Cable | Enchufe | Modo de conexión eléctrica
09 RCD / GFCI
11 Presión del agua
12 Consumo máximo de agua (vapor)
13 Dimensión de la cavidad (w x d x h)
14 Carga máxima de alimentos
15 Temperatura máxima
16 Grado de protección IP

Français
01 Puissance électrique
02 Fréquence
03 Puissance calorifique nominale électrique
06 Type de câble d'alimentation
07 Tension Section câbles d'alimentation Disjoncteur
08 Câble | Prise | Branchement électrique
09 RCD / GFCI
11 Pression de l'eau
12 Consommation max. d'eau (vapeur)
13 Dimension de la cavité (l x p x h)
14 Charge max. des aliments
15 Température max.
16 Niveau de protection IP

Deutsch
01 Elektrische Leistung
02 Frequenz
03 Elektrische Nennwärmeleistung
06 Stromkabel Typ
07 Spannung Stromkabel Teil Sicherung
08 Leitung | Stecker | Elektrischer Verbindungsmodus
09 RCD / GFCI
11 Wasserdruck
12 Maximaler Wasserverbrauch bei Damfbetrieb
13 Abmessungen des Hohlraums (B x T x H)
14 Maximale Beladungskapazität
15 Maximale Temperatur
16 IP-Schutzart

Русский
01 Мощность
02 Частота
03 Номинальная электрическая потребляемая мощность
06 Тип силового кабеля
07 Напряжение Сечение силового кабеля Токовый автомат
08 Кабель | Вилка | вид электрического соединения
09 RCD / GFCI
11 Давление воды
12 Максимальное потребление воды (пар)
13 Габариты камеры (ш x г x в)
14 Максимальная загрузка
15 Максимальная температура
16 Класс защиты IP

中文
01 功率
02 频率
03 电额定热输入
06 电源电缆类型
07 电压 电源电缆截面 断路器
08 电缆和插头 | 电气连接方式
09 RCD / GFCI
11 水压
12 最大水消耗（蒸汽）
13 腔室尺寸 (宽 x 深 x 高)
14 最大食物负荷
15 最高温度
16 IP保护等级

Português
01 Potência
02 Frequência
03 Potência térmica nominal elétrica
06 Tipo de cabo de alimentação
07 Tensão Seção de cabos de alimentação Disjuntor
08 Cabo | Plugue | Modo de Conexão Elétrica
09 RCD / GFCI
11 Pressão da água
12 Max. consumo de água (vapor)
13 Dimensão de cavidade (c x l x a)
14 Max. capacidade de alimento
15 Max. temperatura
16 Grau de proteção IP

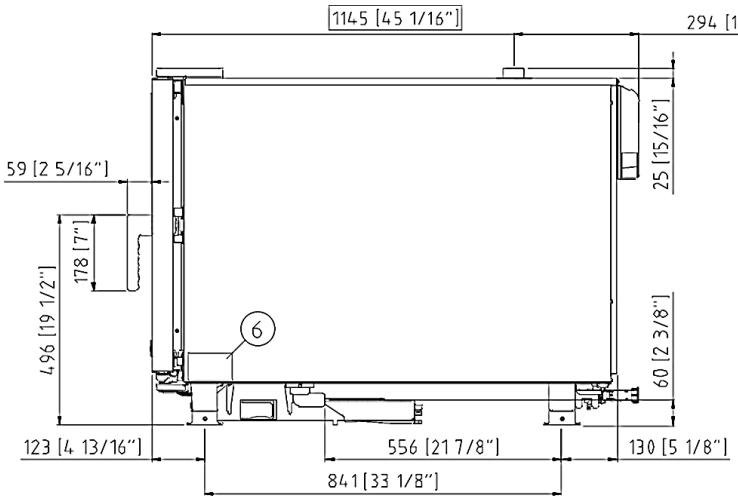
1145 [45 1/16"]
294 [11 9/16"]
25 [15/16"]
59 [2 5/16"]
178 [7"]
496 [19 1/2"]
6
60 [2 3/8"]
123 [4 13/16"]
556 [21 7/8"]
130 [5 1/8"]
841 [33 1/8"]

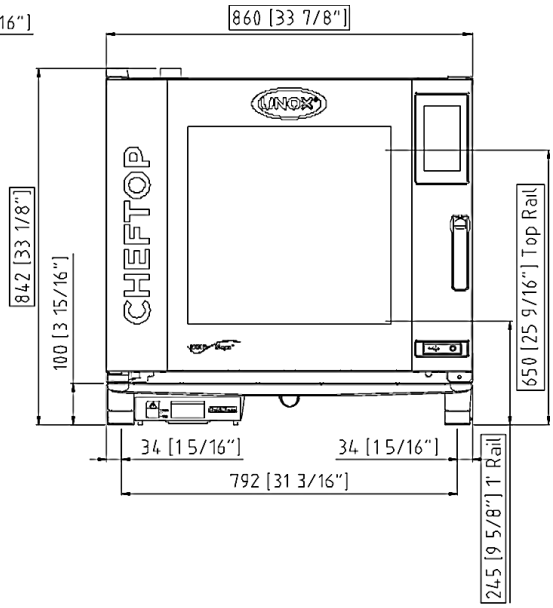
860 [33 7/8"]
842 [33 1/8"]
100 [3 15/16"]
CHEFTOP
650 [25 9/16"] Top Rail
34 [1 5/16"]
34 [1 5/16"]
792 [31 3/16"]
245 [9 5/8"] 1" Rail

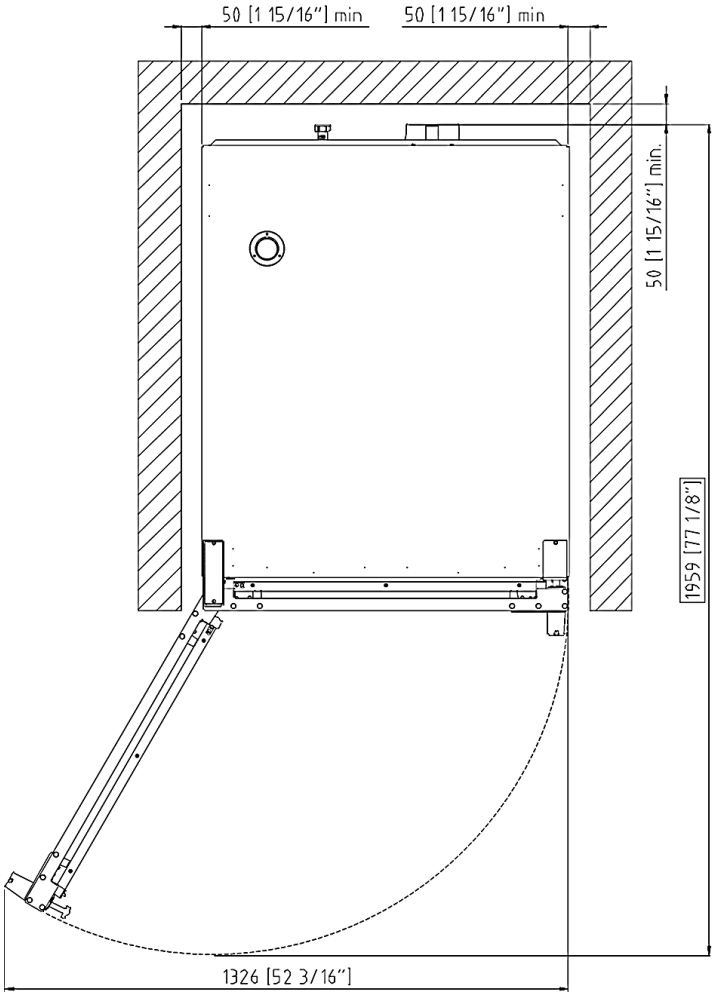
50 [1 15/16"] min
50 [1 15/16"] min
50 [1 15/16"] min.
1959 [77 1/8"]
1326 [52 3/16"]

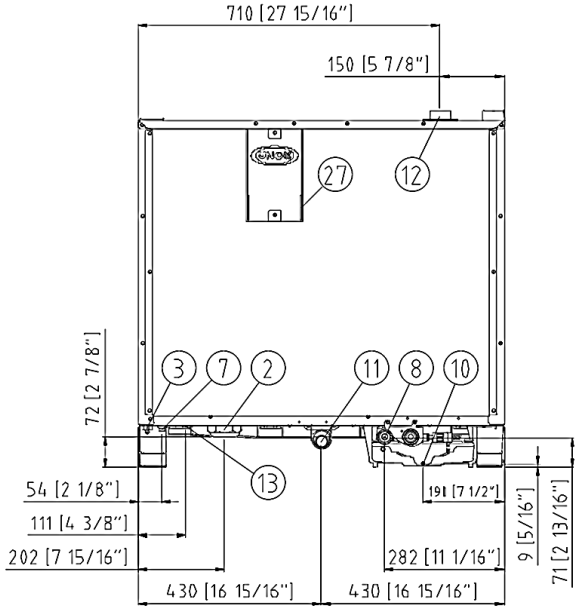
710 [27 15/16"]
150 [5 7/8"]
27
12
72 [2 7/8"]
3
7
2
11
8
10
13
54 [2 1/8"]
111 [4 3/8"]
202 [7 15/16"]
191 [7 1/2"]
282 [11 1/16"]
9 [5/16"]
71 [2 13/16"]
430 [16 15/16"]
430 [16 15/16"]

	English	Italiano	Español	Français	Deutsch
02	Electrical connection	Allacciamento elettrico	Conexión eléctrica	Raccordement électrique	Elektrischer Anschluss
08	Water connection	Allacciamento idrico	Conexión de agua	Raccordement à l'eau	Wasseranschluss
09	Gas connection	Allacciamento gas	Conexión de gas	Raccordement au gaz	Gasanschluss
11	Water drain	Scarico acqua	Desagüe del agua	Evacuation	Abflussrohr
12	Smoke exhaust	Scarico fumi	Salida de humos	Aspiration des fumées	Abluftrohr
13	Accessories connection	Collegamento accessori	Conexión de accesorios	Connexion des accessoires	Anschluss des Zubehörs
30	Combustion fumes	Fumi di combustione	Gases de combustión	Fumées de combustion	Abgasse
31	Air inlet	Ingresso aria	Entrada de aire	Entrée d'air	Lufteinlass

	Русский	中文	Português
02	Электрическое подключение	电源连接	Conexão elétrica
08	Подключение к воде	水连接	Conexão hídrica
09	Подключение к газу	燃气连接	Conexão gás
11	Выход воды	排水	Saída de água
12	Выход газов	排烟	Saída de fumaça
13	Подключение аксессуаров	配件连接	Conexão de acessórios
30	Продукты горения	燃烧烟雾	Fumaça de combustão
31	Воздухозаборник	空气入口	Entrada de ar

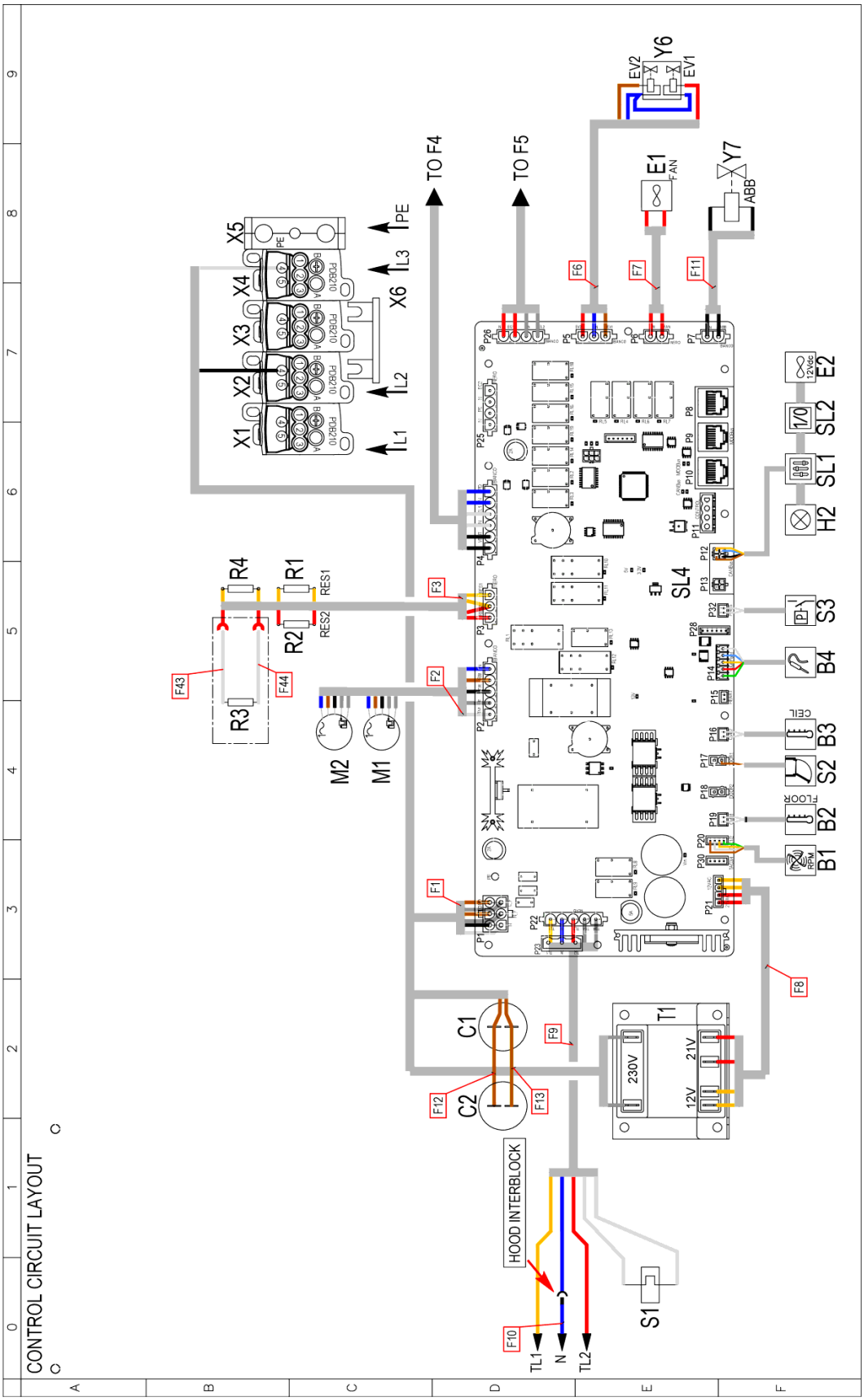
CONTROL CIRCUIT LAYOUT
TO F4
TO F5
HOOD INTERBLOCK
TL1
N
TL2
S1
C1
C2
T1
230V
21V
12V
F1
F2
F3
F6
F7
F8
F9
F10
F11
F12
F13
F43
F44
R1
R2
R3
R4
RES1
RES2
M1
M2
X1
X2
X3
X4
X5
X6
L1
L2
L3
PE
Y6
EV1
EV2
E1
FAN
Y7
ABB
E2
SL1
SL2
H2
SL4
S3
B4
B3
S2
B2
B1
CEIL
FLOOR

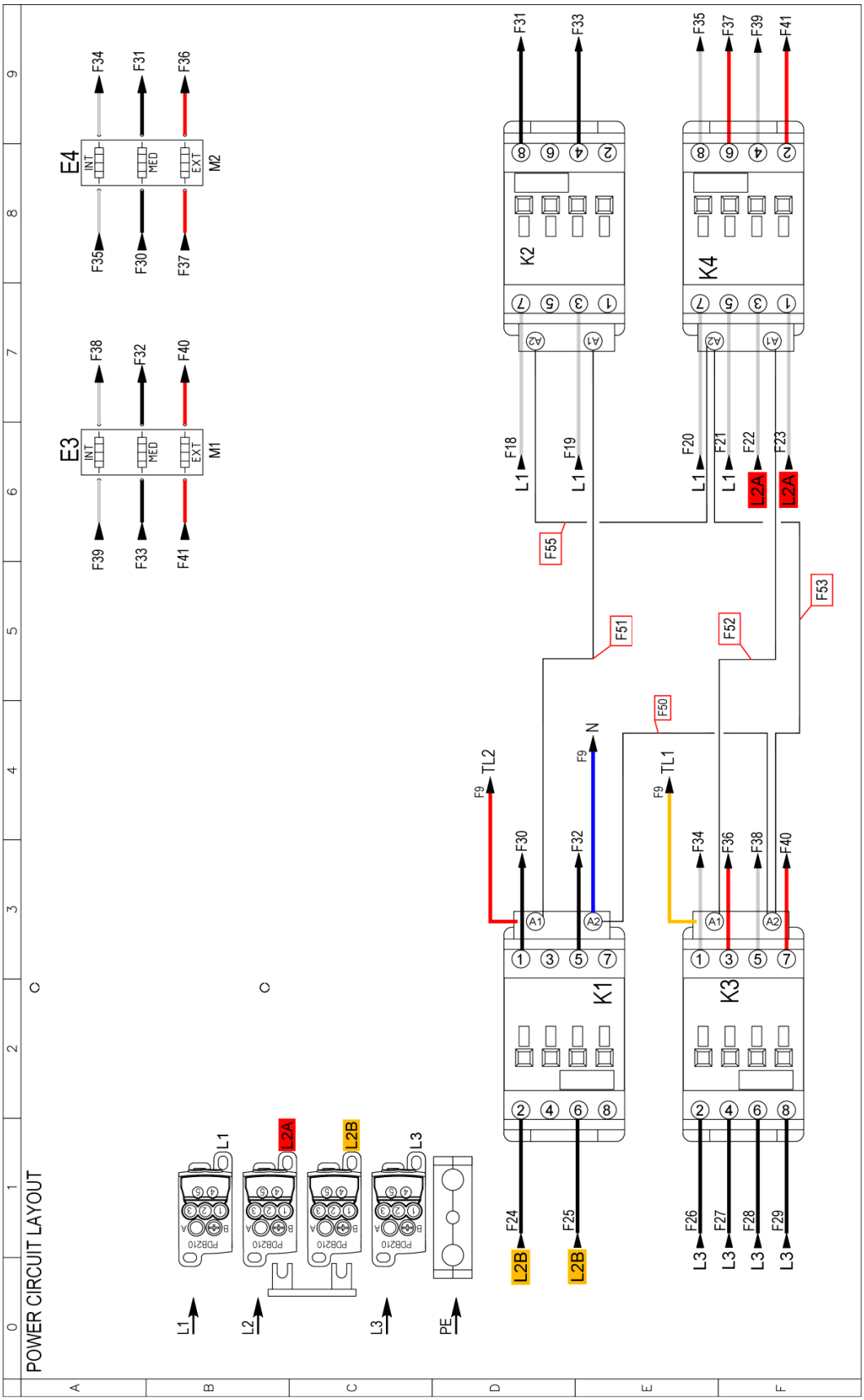
POWER CIRCUIT LAYOUT
E4
INT
MED
EXT
M2
E3
M1
K1
K2
K3
K4
PDB210
L1
L2A
L2B
L3
PE
N
TL1
TL2
F9
F18
F19
F20
F21
F22
F23
F24
F25
F26
F27
F28
F29
F30
F31
F32
F33
F34
F35
F36
F37
F38
F39
F40
F41
F50
F51
F52
F53
F55

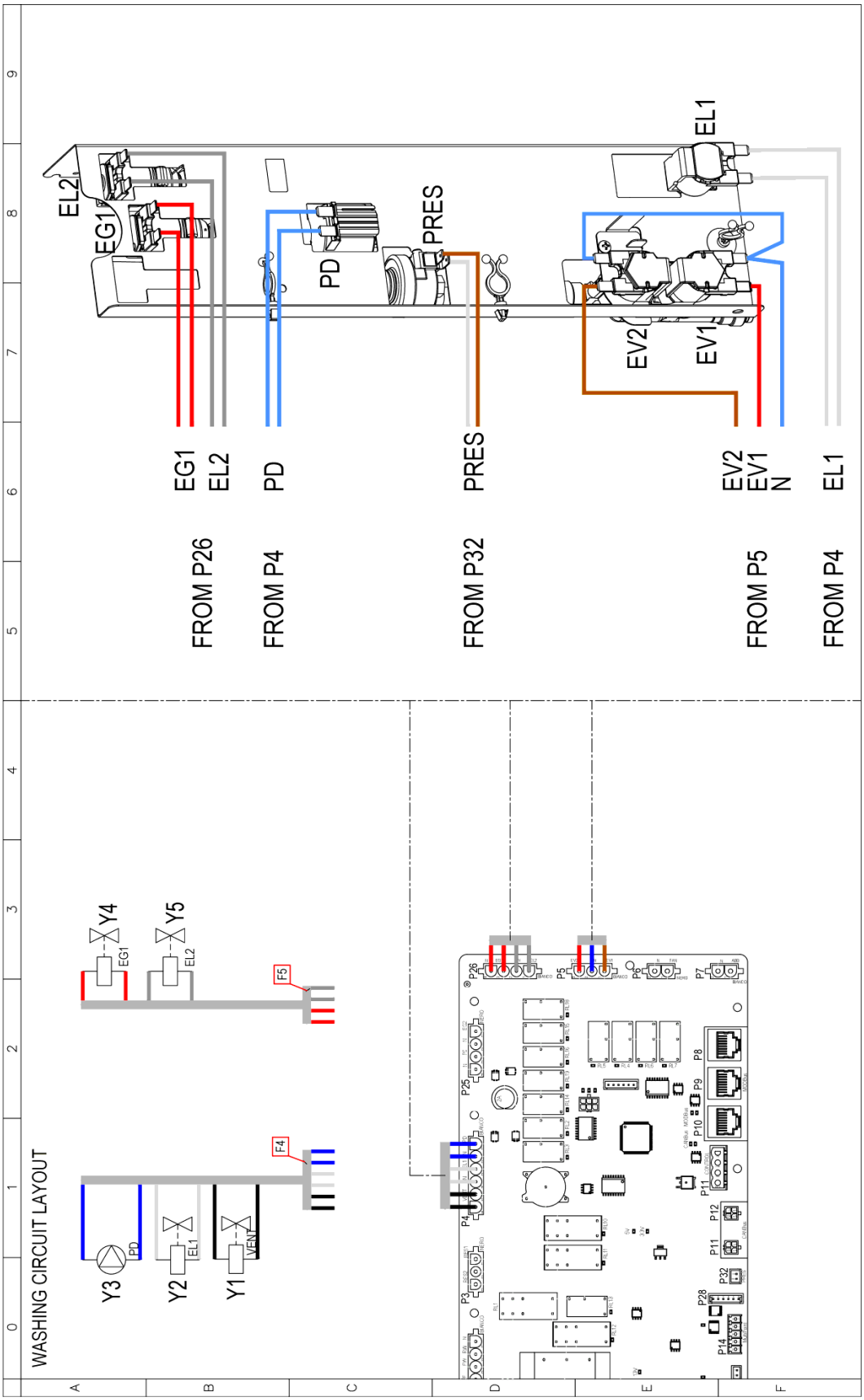
EL2
EG1
PD
PRES
EL1
EV2
EV1
EG1
EL2
PD
PRES
EV2
EV1
N
EL1
FROM P26
FROM P4
FROM P32
FROM P5
FROM P4
WASHING CIRCUIT LAYOUT
Y4
Y5
EG1
EL2
F5
F4
Y3
Y2
Y1
PD
EL1
VENT
P26
P5
P8
P7
P25
P9
P10
P4
P11
P12
P3
P32
P28
P14

Sigle	ITALIANO	ENGLISH	FRANCAIS	ESPAÑOL	DEUTSCH
C1,C2	CONDENSATORE	MOTOR CAPACITOR	CONDENSATEUR	CONDENSADOR	KONDENSATOR
E3,E4	ELEMENTO RISCALDANTE	HEATING ELEMENT	ELEMENT DE CHAUFFAGE	RESISTENCIA DE CALEFACCIÓN	HEIZUNG
K1,K2,K3,K4	TELERUTTORE	CONTACTOR	TELERUPTEUR	TELERRUPTOR	RELAIS
SL3	SCHEDA POTENZA	POWER CARD	CARTE DE PUISSANCE	TARJETA POTENCIA	POWERPLATINE
T1	TRASFORMATORE	TRANSFORMER	TRASFORMATEUR	TRANSFORMADOR	TRANSFORMATOR
X1,X2,X3	MORSETTIERA	TERMINAL BLOCK	BORNIER	CONECTOR	KLEMMLEISTE
X4	MORSETTIERA	TERMINAL BLOCK	BORNIER	CONECTOR	KLEMMLEISTE
B1	SENSORE VELOCITA MOTORE	MOTOR SPEED SENSOR	CAPTEUR DE VITESSE MOTEUR	SENSOR DE VELOCIDAD MOTOR	GESCHWINDIGKEITSSENSOR
B2,B3	SONDA CAMERA	TEMPERATURE PROBE	SONDE DE CHAMBRE	SONDA CAMARA	GARRAUMTEMPERATURFUHLER
B4	SONDA AL CUORE	CORE PROBE	SONDE A COEUR	SONDA CORAZON	KERNTEMPERATURFUHLER
E1	VENTOLA RAFFREDDAMENTO 230V	COOLING FAN 230V	TURBINE DE REFROIDISSEMENT 230V	TURBINA DE REFRIGERACION 230V	LÜFTER 230V
E2	VENTOLA RAFFREDDAMENTO 12V	COOLING FAN 12V	TURBINE DE REFROIDISSEMENT 12V	TURBINA DE REFRIGERACION 12V	LÜFTER 12V
H2	LUCE CAMERA	OVEN LIGHT	ECLAIRAGE DE CHAMBRE	LUZ CAMARA	BELEUCHTUNG
M1,M2	MOTORE	MOTOR	MOTEUR	MOTOR	MOTOR
R1,R2,R3,R4	RESISTENZA DI MODULAZIONE VENTILATORE	MOTOR MODULATION RESISTANCE	RESISTANCE DE MODULATION VENTILATEUR	RESISTENCIA MODULACION VELOCIDAD	WIDERSTAND LOW FAN
S1	TERMOSTATO SICUREZZA	SAFETY THERMOSTAT	THERMOSTAT DE SECURITE	TERMOSTATO DE SEGURIDAD	SICHERHEITS THERMOSTAT
S2	MICRO INTERRUTTORE PORTA	DOOR MICROSWITCH	MICROINTERRUPTEUR DE PORTE	MICROINTERRUPTOR PUERTA	TURKONTAKTSCHALTER
S3	PRESSOSTATO	PRESSURE SWITCH	PRESSOSTAT	PRESÓSTATO	DRUCKSCHALTER
SL1	SCHEDA CONTROLLO	CONTROL BOARD	CARTE DE CONTROLE	TARJETA DE CONTROL	KONTROLL PLATINE
SL2	SCHEDA 1/0 – USB	USB – 1/0 BOARD	USB – CARTE 1/0	USB – TARJETA 1/0	USB – 1/0 PLATINE
Y1,Y2,Y4,Y5,Y7	ELETTROVALVOLA ACQUA	WATER SOLENOID VALVE	ELECTROVANNE EAU	ELECTROVALVULA	ELEKTROVENTIL
Y3	POMPA	PUMP	POMPE	BOMBA	PUMPE
Y6	ELETTROVALVOLA ACQUA 3 STADI	WATER SOLENOID VALVE 3STAGE	ELECTROVANNE EAU 3 E'TAPES	ELECTROVALVULA 3 ETAPAS	ELEKTROVENTIL 3 STUFEN

ED1566A

POWER SUPPLY - CONNECTION DIAGRAM

208V-240V ~ 3PH + PE 50/60Hz

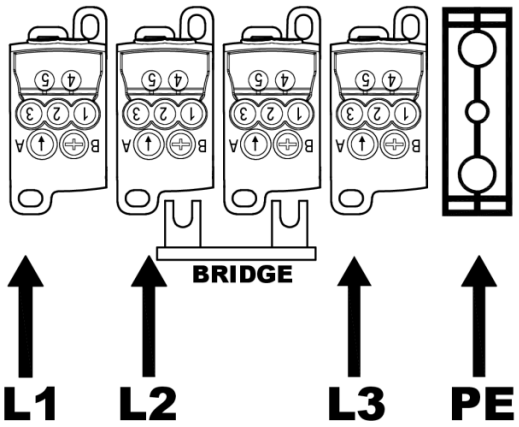

USE ONLY COPPER WIRE

208-240V ~ 2PH + PE 50/60Hz

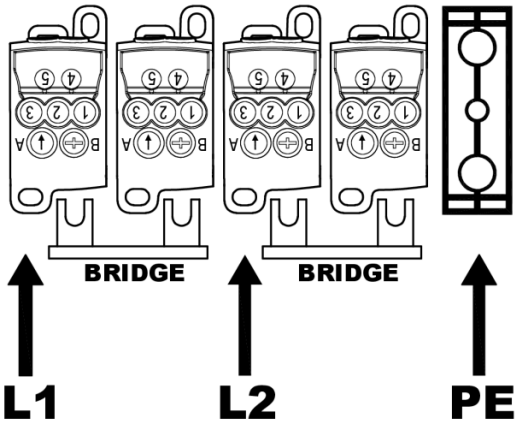

USE ONLY COPPER WIRE