Vegetable Slicer
TRS Vegetable Slicer, 1 speed

ITEM #

MODEL #

NAME #

SIS #

AIA #



602240 (DTRS)	Vegetable Slicer, 1 Speed, 750W/ 1HP/100-120V/1ph/60Hz, NEMA 5-15P plug - US
602239 (DTRS)	TRS Vegetable Slicer, single speed (400 RPM), 370W - 1/2HP/100-120V/1PH/60HZ, NEMA 5-15P

Short Form Specification

Item No.

TRS VEG. SLICER, 1 SPEED, 750W- 1HP/100-120V/1PH/60HZ, NEMA 5-15P

APPROVAL:

Main Features

- Suitable for 100-400 meals for table service and up to 800 meals for catering service.
- Vegetable slicer unit has slicing, grating, shredding (julienne) as well as dicing and french fries capabilities.
- Ergonomically designed for right and left-handed users, frontal working and to reduce working space around the machine.
- All parts in contact with food are removable without the use of tools, stainless steel hopper, stainless steel lever and cutting chamber are dishwasher safe.
- Hopper easily removed for cleaning.
- Base inclined at 20° to provide easy loading and unloading.
- High discharge zone permits the use of deep containers up to 8" high (20cm).
- Complete and wide selection of blades and grids available, Diameter of blades and grids are 8" (205mm).
- Pulse function for precise cutting.
- Magnetic safety system and motor brake. Prevents machine from running when lever swings away or is open.
- Automatic restart of the machine with the 3/4 moon shaped pusher in position.
- Continuous feed model.
- Large round (long vegetable) and large 3/4 moon feed hoppers.
- Delivered with: All stainless steel vegetable prep attachment with a lever-integrated long vegetable hopper and a large round hopper.

Construction

- Compact and portable design.
- Improved ventilation system to manage smoothly heavy duty use.
- Reinforced basement and feet to withstand the continuous movements of the unit.
- Improved fixing of long vegetable hopper pusher.
- Power: 750 watts (1 HP). (only for 602240)
- 1 speed: 400 rpm - for precise cutting, slicing and dicing.
- Rear handle for ergonomic and safe movement.
- Power: 370 watts (only for 602239)

Included Accessories

- 1 of Ejector disc PNC 653772

Optional Accessories

- Stainless steel shredding disc with S-blades 5/32" x 5/32" (4x4 mm) PNC 650077 ❑
- Stainless steel shredding disc with S-blades 1/4"x 1/4" (6x6 mm) (can also be used for French fries) PNC 650078 ❑

Vegetable Slicer
TRS Vegetable Slicer, 1 speed

- Stainless steel shredding disc with S-blades 5/16" x 5/16" (8x8 mm) (can also be used for French fries) PNC 650079 ❑
- Stainless steel shredding disc with S-blades 3/8" x 3/8' (10x10 mm) (can also be used for French fries) PNC 650080 ❑
- Stainless steel pressing/slicing disc with S-blades .6 mm (can be used for slicing or combined with grids) PNC 650081 ❑
- Stainless steel pressing/slicing disc with S-blades 1/32" (1 mm) (can be used for slicing or combined with grids) PNC 650082 ❑
- Stainless steel pressing/slicing disc with S-blades 5/64"(2 mm) (can be used for slicing or combined with grids) PNC 650083 ❑
- Stainless steel pressing/slicing disc with S-blades 1/8" (3 mm) (can be used for slicing or combined with grids) PNC 650084 ❑
- Stainless steel pressing/slicing disc with S-blades 5/32" (4 mm) (can be used for slicing or combined with grids) PNC 650085 ❑
- Stainless steel pressing/slicing disc with S-blades 3/16" (5 mm) (can be used for slicing or combined with grids) PNC 650086 ❑
- Stainless steel pressing/slicing disc with S-blades 1/4" (6 mm) (can be used for slicing or combined with grids) PNC 650087 ❑
- Stainless steel pressing/slicing disc with S-blades 5/16" (8 mm) (can be used for slicing or combined with grids) PNC 650088 ❑
- Stainless steel pressing/slicing disc with corrugated S-blades 5/64" (2 mm) (can be used for slicing or combined with grids) PNC 650089 ❑
- Stainless steel pressing/slicing disc with corrugated S-blades 1/8" (3 mm) (can be used for slicing or combined with grids) PNC 650090 ❑
- Stainless steel pressing/slicing disc with corrugated S-blades 1/4" (6 mm) (can be used for slicing or combined with grids) PNC 650091 ❑
- Bistrot Pack, Stainless Steel Disc Set containing one each of: C2SX 5/64 " (2mm) slicing disc, C5SX 3/16" (5mm) slicing disc, J2X 5/64" (2mm) grating disc PNC 650092 ❑
- Gastronomic 6-Disc Set, Stainless Steel Disc Set containing one each of: C2S 5/64" (2mm) slicing disc, C5S 3/16" (5mm) slicing disc, J2X 5/64 " (2mm) grating disc, AS4X 5/32" x5/32" (4x4mm) shredding disc, C10PS 3/8" (10mm) presser/slicer, MT10T 3/8"x3/8" (PNC 650093 ❑
- Set of 3 stainless steel discs for Pizza 5/64", 5/32", 9/32" (2mm and 4mm pressing/slicing discs with S-blades, 7mm grating disc) PNC 650107 ❑
- Cleaning tool for TRS, TRK & TR210 3/16-5/16-3/8 in (5-8-10 mm) dicing grids PNC 650110 ❑
- Dicing set 10X10X10MM (10mm aluminum slicing pressing disc with 205mm diam. and 10mm grid) PNC 650112 ❑
- Gastronomy Pack-set discs (2mm, 5mm and 10mm slicing pressing discs, 2mm grating disc, 4x4mm shredding disc, 10x10mm dicing grid) and grid cleaning tool PNC 650113 ❑
- Set of 7 discs (2mm, 5mm and 10mm slicing pressing discs, 2mm and 7mm grating discs, 4x4mm shredding disc, 10x10mm dicing grid) and grid cleaning tool PNC 650114 ❑
- Aluminum pressing/slicing disc with straight blades 10 mm - for dicing PNC 650115 ❑
- Aluminum pressing/slicing disc with straight blades 8 mm - for dicing PNC 650116 ❑
- Stainless steel shredding disc with S-blades 5/64" x 5/16" (2x8 mm) PNC 650158 ❑
- Stainless steel shredding disc with S-blades 5/64" x 3/8" (2x10 mm) PNC 650159 ❑
- Stainless steel pressing/slicing disc with S-blades 3/8" (10 mm) (can be used for slicing or combined with grids) PNC 650160 ❑
- Stainless steel pressing/slicing disc with S-blades 15/32" (12 mm) (can be used for slicing or combined with grids) PNC 650161 ❑
- Stainless steel pressing/slicing disc with corrugated S-blades 5/16" (8 mm) (can be used for slicing or combined with grids) PNC 650162 ❑
- Stainless steel pressing/slicing disc with corrugated S-blades 3/8" (10 mm) (can be used for slicing or combined with grids) PNC 650164 ❑
- Stainless steel pressing/slicing disc with S-blades 33/64" (13 mm) (can be used for slicing or combined with grids) PNC 650165 ❑
- Stainless steel shredding disc with S-blades 5/64"x 5/64" (2x2 mm) PNC 650166 ❑
- Stainless steel shredding disc with S-blades 1x8" x 1/8" (3x3 mm) PNC 650167 ❑
- Set of 4 Stainless Steel Discs containing one each of: C2S 5/64 " (2mm) slicing disc, C5S 3/16" (5mm) slicing disc, J2X 5/64" (2mm) grating disc and J7X 9/32" (7mm) grating disc PNC 650178 ❑
- Set of 7 Stainless Steel Discs containing one each of: C2S 5/64 " (2mm) slicing disc, C5S 3/16" (5mm) slicing disc, J2X 5/64" (2mm), J7X 9/32" (7mm) grating disc, AS4X 5/32"x5/32" (4x4mm) shredding disc, C10PSB 3/8" (10mm) presser/slicer, MT10T 3/8"x3/8 (1 PNC 650179 ❑
- Stainless steel work table assembly. PNC 653283 ❑
- Dicing grid 3/16" x 3/16" (5x5 mm) PNC 653566 ❑
- Dicing grid 5/16" x 5/16" (8x8 mm) PNC 653567 ❑
- Dicing grid 3/8"x 3/18" (10x10 mm) PNC 653568 ❑

• Dicing grid 15/32"x 15/32" (12x12 mm)	PNC 653569	❑
• Dicing grid 25/32"x 25/32" (20x20 mm)	PNC 653570	❑
• Grid for chips 1/4" x 1/4" (6x6 mm)	PNC 653571	❑
• Grid for chips 5/16"x 5/16" (8x8 mm)	PNC 653572	❑
• Grid for chips 3/8" x 3/8" (10x10 mm)	PNC 653573	❑
• Support for 1 disc, diam. 175mm and 205mm	PNC 653632	❑
• Ejector disc	PNC 653772	❑
• Stainless steel grating disc 5/64", fine (2mm)	PNC 653773	❑
• Stainless steel grating disc, 1/8", fine (3mm)	PNC 653774	❑
• Stainless steel grating disc 5/32 " (4mm)	PNC 653775	❑
• Stainless steel grating disc 9/32 " (7mm)	PNC 653776	❑
• Stainless steel grating disc 11/32 " (9mm)	PNC 653777	❑
• Stainless steel grating disc, designed for nuts, chocolate & bread crumbs, stainless steel	PNC 653778	❑
• Stainless steel grating disc, especially fine grating for Parmesan cheese and chocolate, stainless steel	PNC 653779	❑
• Set of 3 discs, diam. 205 mm (5mm slicer, 4mm grater, 6mm julienne/ shredder)	PNC 653869	❑
• Set of 5 discs, diam. 205 mm (4mm and 6mm slicer, 6mm julienne/ shredder, 5mm and 10 mm slicer, 10x10mm grid)	PNC 653870	❑

Vegetable Slicer
TRS Vegetable Slicer, 1 speed

Front

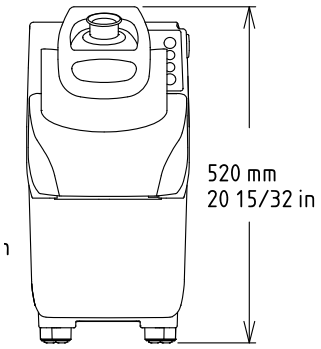

Side

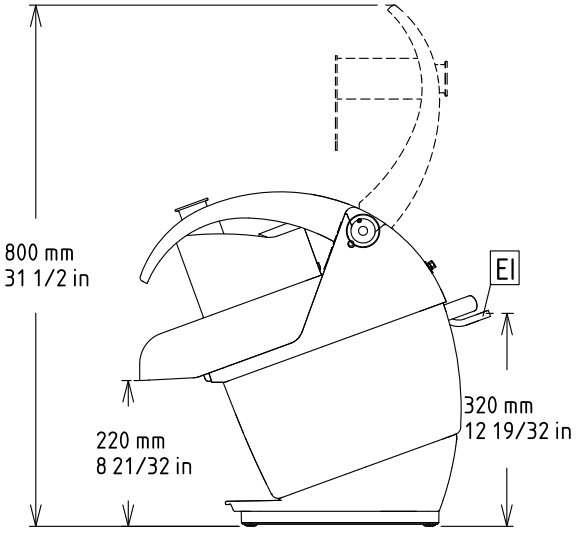

EI = Electrical connection

Top

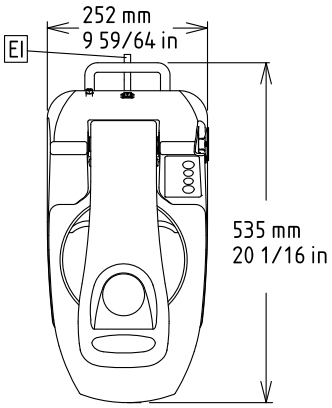

Electric

Supply voltage:	
602240 (DTRS)	100-120 V/1N ph/60 Hz
602239 (DTRS)	100-120 V/1N ph/60 Hz
Total Watts:	
602240 (DTRS)	0.8 kW
602239 (DTRS)	0.4 kW
Plug type:	USA NEMA 5-15P

Key Information:

External dimensions, Width:	9 15/16" (252 mm)
External dimensions, Depth:	19 11/16" (500 mm)
External dimensions, Height:	20 1/4" (515 mm)
Shipping width:	
602240 (DTRS)	13 " (330 mm)
602239 (DTRS)	25 3/16" (640 mm)
Shipping depth:	
602240 (DTRS)	25 3/16" (640 mm)
602239 (DTRS)	13 " (330 mm)
Shipping height:	23 5/8" (600 mm)
Shipping weight:	
602240 (DTRS)	60 lbs (27 kg)
602239 (DTRS)	55 lbs (25 kg)

The company reserves the right to make modifications to the products without prior notice. All information correct at time of printing.

2023.09.25

Babak Food Equipment

Authorized Dito Sama dealer · Vancouver, BC

View the full Dito Sama range, request a quote or call (604) 566-9747

babakfoodequipment.com/brand/dito-sama