Vegetable Slicer Cutter-mixer 4.5 l/4.7qt, var. speed, 1000w, nema 5-15p

ITEM #

MODEL #

NAME #

SIS #

AIA #



602244 (DK45)

Cutter Mixer, variable speed (300-3700 RPM). Supplied with 4.5 lt/ 4.7 qt stainless steel bowl with clear BPA-free lid, equipped with bowl scraper, microtoothed blade rotor and metal motor housing, 1-1/3 HP

Short Form Specification

Item No.

Cutter Mixer, variable speed (300-3700 RPM). Supplied with 4.5 lt/ 4.7 qt stainless steel bowl with clear BPA-free lid, equipped with bowl scraper, microtoothed blade rotor and metal motor housing, 1-1/3 HP

APPROVAL:

Main Features

- Emulsifier function (scraper) included as standard.
- All parts in contact with food are removable without the use of tools, completely dismountable and dishwasher safe.
- Pulse function to coarse chopping.
- Base fixed cover for a better handling.
- Capacity: cutter mixer working capacity from 1/3 ounce (100 g) to 4.4 lbs (2 kg), for 50-80 meals per service.

Construction

- Asynchronous industrial motor with no brushes for high reliability and quiet functioning, stainless steel motor shaft.
- All blades (available on request) are made in stainless steel and dishwasher safe.
- Power: TRK45 - 1.3 HP.
- Stainless steel bowl has a high chimney to ensure high productivity also when processing liquids (75% of the nominal capacity).
- IPX5 (IP55) flat panel touch-control, watertight panel.
- Compact and portable design.
- Improved ventilation system to manage smoothly heavy duty use.
- Reinforced feet to withstand the repeated handling of the unit.
- Food processing at 10 variable speeds: 300-3700 rpm.

Included Accessories

• 1 of Lid and bowl scraper for 4.7 qts (4.5 L) cutter mixer	PNC 650099
• 1 of Microtoothed blade rotor for 4.7 qts (4.5 L) cutter mixer	PNC 653580
• 1 of Stainless steel bowl for 4.7 qts (4.5 L) cutter mixer	PNC 653589

Optional Accessories

• MICROTOOTH BLADE-EMULS-4.8qt CUTTERMIXER	PNC 650039	❑
• Lid and bowl scraper for 4.7 qts (4.5 L) cutter mixer	PNC 650099	❑
• Emulsifying kit for TRK, K45 variable speed,including 4,5 lt ss bowl, smooth emulsion blade, lid and scraper	PNC 650100	❑
• Smooth blade rotor for 4.7 qts (4.5 L) cutter mixer	PNC 653579	❑
• Microtoothed blade rotor for 4.7 qts (4.5 L) cutter mixer	PNC 653580	❑
• Stainless steel bowl for 4.7 qts (4.5 L) cutter mixer	PNC 653589	❑
• Smooth blade rotor (emulsifier) for 4,5 lt cutter mixer	PNC 653614	❑

Vegetable Slicer Cutter-mixer 4.5 l/4.7qt, var. speed, 1000w, nema 5-15p

Front

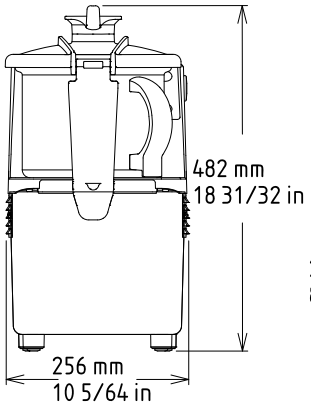

Side

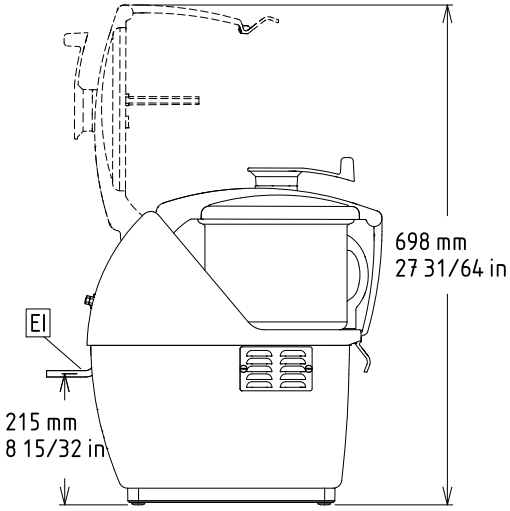

EI = Electrical connection

Top

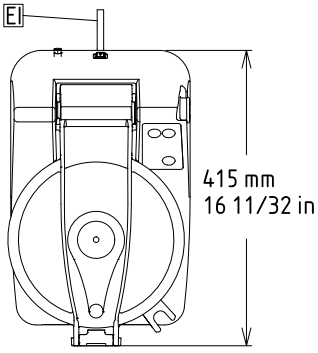

Electric

Supply voltage:	
602244 (DK45)	110-120 V/1N ph/60 Hz
Total Watts:	1 kW
Plug type:	USA NEMA 5-15P

Key Information:

External dimensions, Width:	10 1/16" (256 mm)
External dimensions, Depth:	16 5/16" (415 mm)
External dimensions, Height:	19 " (482 mm)
Shipping width:	11 13/16" (300 mm)
Shipping depth:	23 5/8" (600 mm)
Shipping height:	21 5/8" (550 mm)
Shipping weight:	55 lbs (25 kg)

The company reserves the right to make modifications to the products without prior notice. All information correct at time of printing.

Babak Food Equipment

Authorized Dito Sama dealer · Vancouver, BC

View the full Dito Sama range, request a quote or call (604) 566-9747

babakfoodequipment.com/brand/dito-sama