DXBE20AB



Knead, blend and whip with Dito Sama's newest mixer. Built to withstand the intense demands of bakery and pastry production, this heavy duty unit ensures consistent and high quality mixing required in professional kitchens.

FEATURES

- Planetary mixing action with both fixed and variable speeds to accommodate a wide range of recipes.
- Equipped with essential accessories allowing immediate operation after installation.
- A waterproof control panel for intuitive operation in busy kitchens.
- Lever-operated bowl with automatic locking system to ensure stable mixing and full ingredient incorporation.
- Electronic speed adjustment system engineered for smooth and low-noise operation.

4 YEARS WARRANTY

PARTS AND LABOUR

CONTROL PANEL



SPECIFICATIONS

Supply volatge: 120 V - 1 PH - 60 Hz

Power: 1500 W

Bowl capacity: 20 qt. (20 L)

Max. flour capacity: 15 lb (7 kg)

Max. dough capacity: 25 lb (12 kg)

Fixed speed: 3 speeds (45 - 85 - 170 rpm)

Electronic speed: Variable (from 30 to 190 rpm)

Dimensions:
Length: 26.2" (66 cm)
Width: 20.4" (52 cm)
Height: 47.2" (120 cm)

Connection: NEMA 5-15P (120 V)

Net weight: 258 lb (107 kg)

Included accessories

- Bowl
- Spiral hook
- Beater paddle
- Reinforced whip

ETL LISTED Intertek

Babak Food Equipment
(604) 566-9747 · babakfoodequipment.com

Authorized Dito Sama dealer · view the full Dito Sama range

DXBE20AB

TOP VIEW

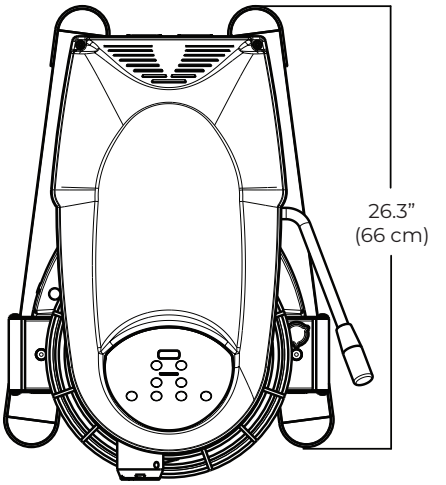

FRONTAL VIEW

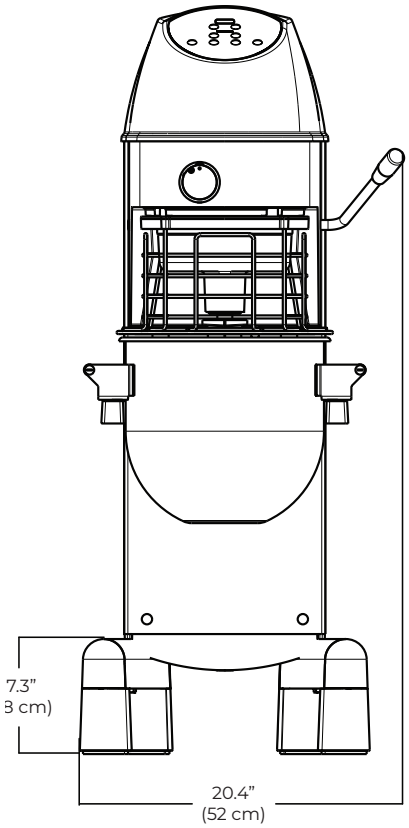

LEFT VIEW

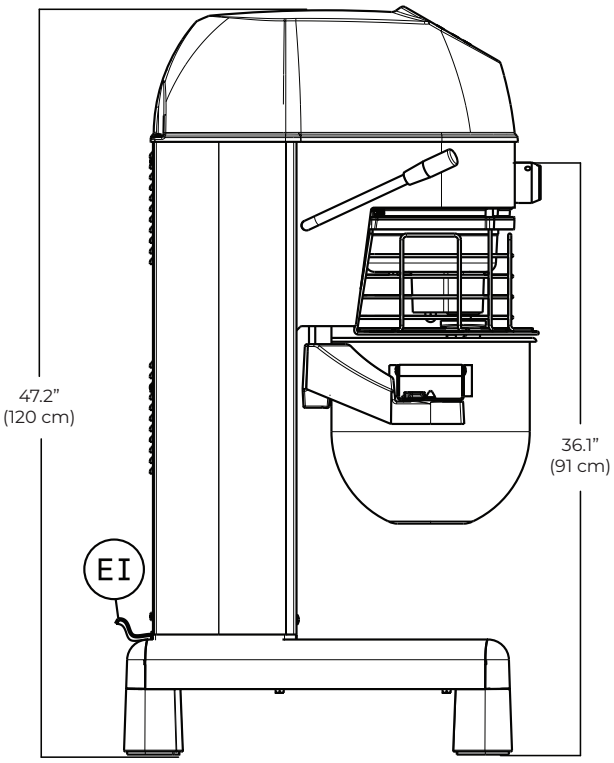

Babak Food Equipment
(604) 566-9747 · babakfoodequipment.com

Authorized Dito Sama dealer · view the full Dito Sama range