eurodib
CCI2351PH



Cook faster and more efficiently with the Eurodib CCI2351PH Commercial Induction Cooktop. Featuring two powerful 3.5 kW induction zones, it delivers precise temperature control and energy-efficient performance in a compact countertop design.

FEATURES

- Dual 3.5 kW induction zones deliver fast, consistent heating for simultaneous cooking.
- German-made SCHOTT ceramic glass provides exceptional durability and easy cleaning.
- Precise temperature control ensures consistent cooking results across a wide range of applications.
- Compact countertop design maximizes workspace without sacrificing performance.
- Advanced safety features include automatic pan detection, overheat protection, and a 6-hour auto shutoff timer.

1 YEAR WARRANTY
PARTS AND LABOR

SPECIFICATIONS

Power: 240 V - 60 Hz - 1 PH

Cooktops: 2

Power per cooktop: 3,500 W

Temperature range:
140 – 460°F (60 – 237°C)

Auto shutoff timer: 6 hours

Maximum allowable load:
176 lb (79 kg)

Glass type:
Schott glass (made in Germany)

Glass size: 14.2 x 15 in (36 x 38 cm)

Induction diameter:
Ø 5.5 in x 11 in (13 x 27 cm)

Compatible with induction pots and pans

Dimensions:
Length: 27.6 in (70 cm)
Width: 17 in (43 cm)
Height: 8.5 in (21 cm)

Connection: 6-30P
(240 V)

Net weight: 54.6 lb (24 kg)

Shipping dimensions:
Length: 37.9 in (96 cm)
Width: 18.9 in (48 cm)
Height: 19.6 in (49 cm)

Shipping weight: 72.3 lb (32 kg)

Intertek Intertek UL 197 LISTED

Babak Food Equipment
(604) 566-9747 · babakfoodequipment.com

Authorized Eurodib dealer · view the full Eurodib range

eurodib

CCI2351PH

TOP VIEW

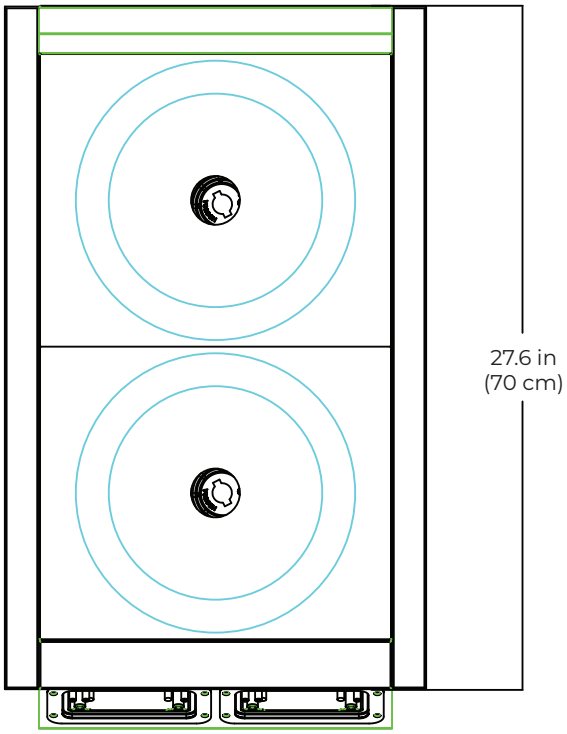

FRONT VIEW

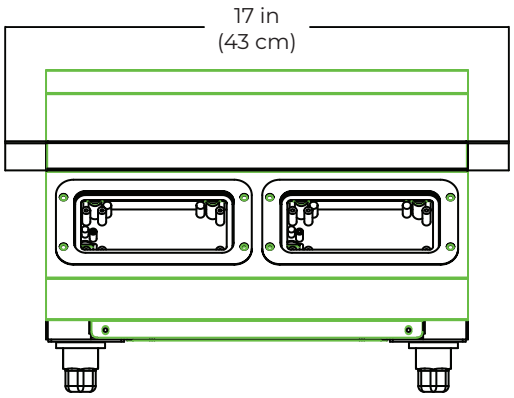

SIDE VIEW

