

NEMOX®
PROFESSIONAL CLASS
Made in Italy

Fantasia Buffet

A compact, versatile display designed to keep gelato, sorbet and other foods chilled at an ideal serving temperature for up to 2 hours without electricity. Perfect for small shops, cafés and catering services looking to diversify their offerings on display without the need for additional refrigeration. Simply freeze the bowls ahead of time, fill and serve.



Features

- Cools 1 L of liquid from 80°C (176°F) to 8°C (46.4 °F) in 20 minutes
- Holds ice cubes for hours without melting
- Cools and stores wine bottles
- Suitable for fresh fruit, appetizers, vegetables, meats and cheeses
- Required freezing time: 8-12 hours
- Time on coutertop: 2 hours

Includes:
(3) Hermetically sealed double-lined bowls
(3) Transparent lids
(3) Ice cream spatulas
(3) Spatula holders
(1) Stainless steel supporting frame
(1) Drip tray

Optional Accessory:
Kit of (3) bowls and (3) lids

FANTASIA BUFFET

0036000400

STORAGE CAPACITY	3 × 1.5 L (1.6 Qt.)
DIMENSIONS (L × W × H)	11.8" x 26.6" × 12"
NET WEIGHT	27.4 lbs
SHIP DIMENSION (L × W × H)	15" x 29.5" × 14.5"
SHIP WEIGHT	30.6 lbs

*RECOMMENDATIONS
SERVING: Use the spatulas provided to protect the inside of the serving bowls
WASHING: Hand wash with hot water and neutral detergent



NEMOX®
PROFESSIONAL CLASS
Made in Italy

FANTASIA BUFFET

0036000400

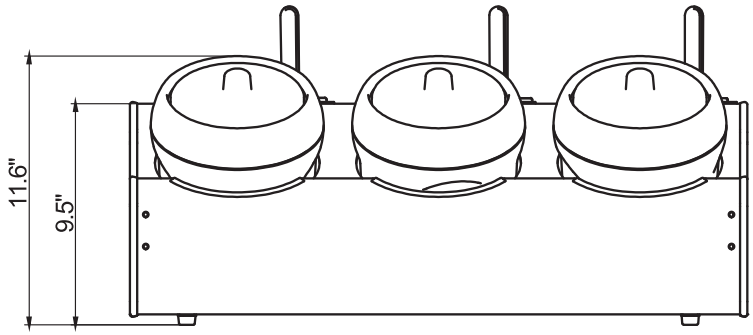

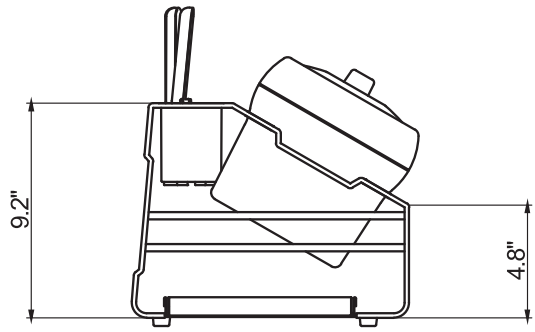

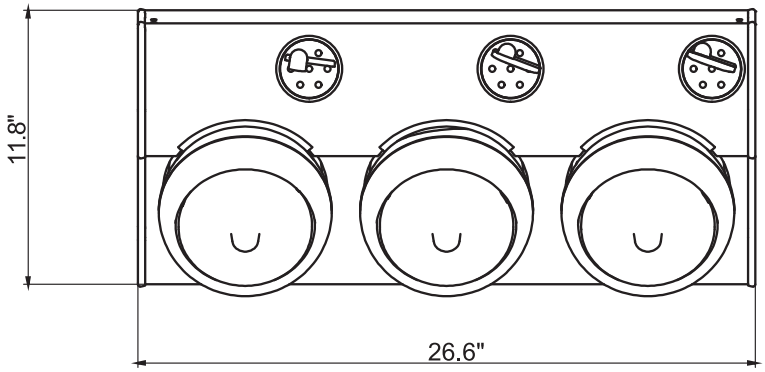

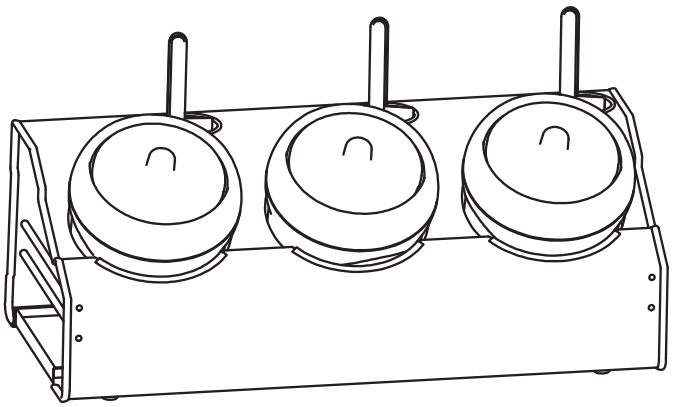

eurodib
US 334 Cornelia St. #272, Plattsburgh, NY 12901 | **CANADA** 120 rue de la Barre, Boucherville, QC J4B 2X7
1 888 956 6866 | customerservice@eurodib.com | www.eurodib.com