ATSP-18-2(NG/LP)

REV.2025.06

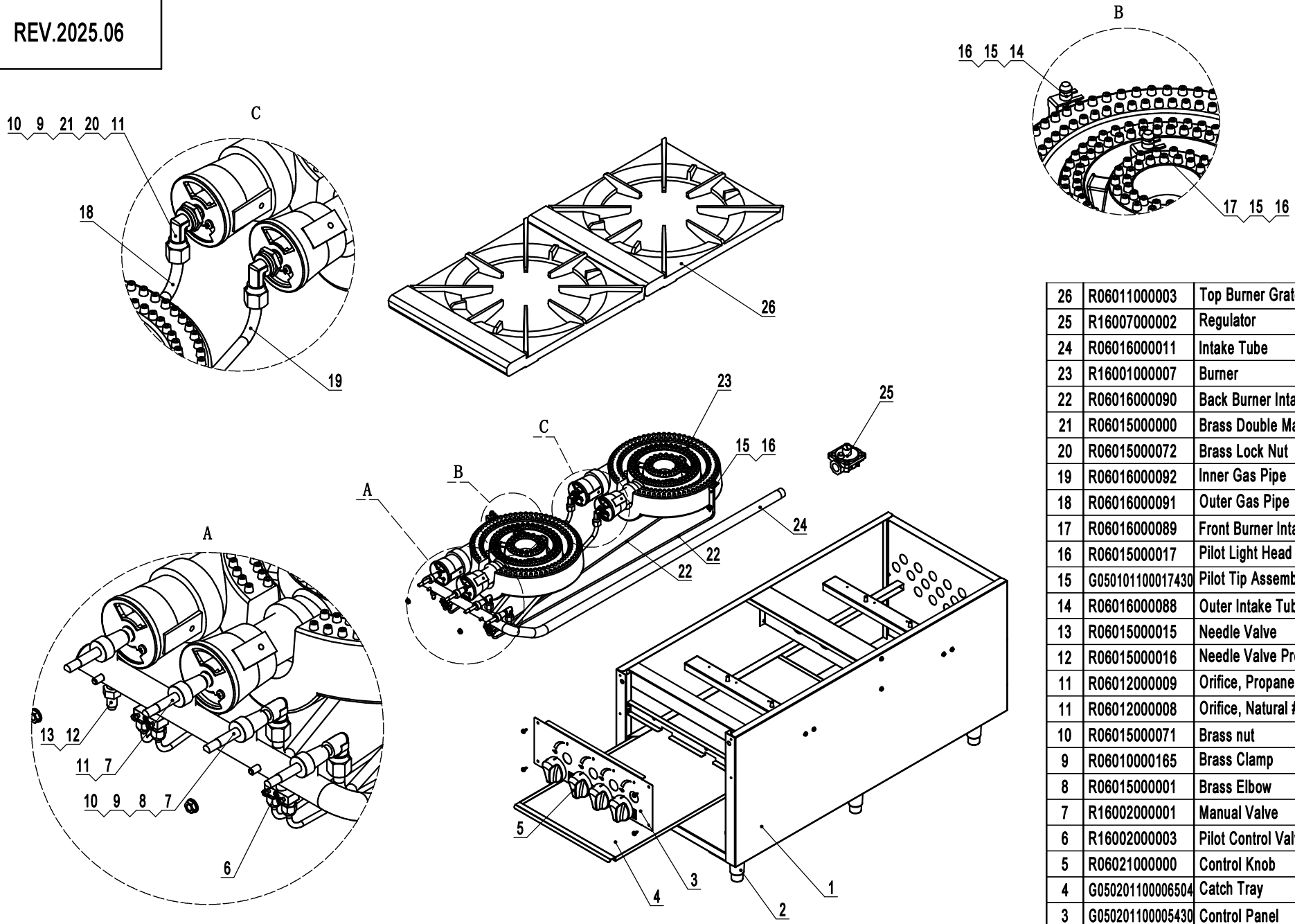

NO.	Part#	Part Name	Qty
26	R06011000003	Top Burner Grate	2
25	R16007000002	Regulator	1
24	R06016000011	Intake Tube	1
23	R16001000007	Burner	2
22	R06016000090	Back Burner Intake Tube	2
21	R06015000000	Brass Double Male Elbow	2
20	R06015000072	Brass Lock Nut	2
19	R06016000092	Inner Gas Pipe	1
18	R06016000091	Outer Gas Pipe	1
17	R06016000089	Front Burner Intake Tube	1
16	R06015000017	Pilot Light Head	4
15	G050101100017430	Pilot Tip Assembly	4
14	R06016000088	Outer Intake Tube	1
13	R06015000015	Needle Valve	1
12	R06015000016	Needle Valve Pressure Fitting	1
11	R06012000009	Orifice, Propane #49	4
11	R06012000008	Orifice, Natural #32	4
10	R06015000071	Brass nut	4
9	R06010000165	Brass Clamp	4
8	R06015000001	Brass Elbow	2
7	R16002000001	Manual Valve	4
6	R16002000003	Pilot Control Valve	2
5	R06021000000	Control Knob	4
4	G050201100006504	Catch Tray	1
3	G050201100005430	Control Panel	1
2	R06001000087	Adjustable Leg	6
1	G050201200020	Fire Box	1