MCF8733GR

REV 12.2024

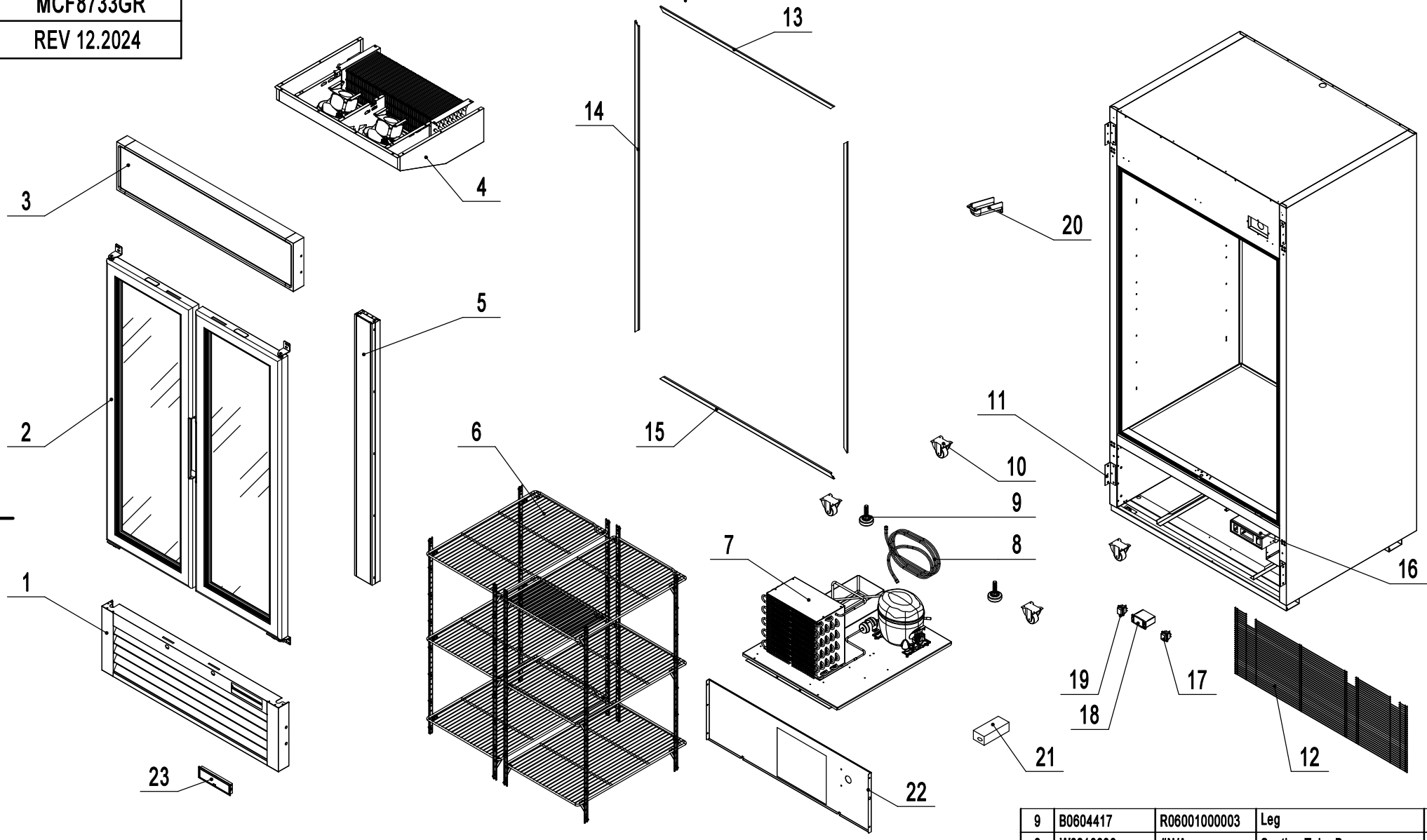

No.	Old Part #	New Part #	Part Name	Qty
9	B0604417	R06001000003	Leg	2
8	W0210638	#N/A	Suction Tube B	1
7	8507GR-CCA	#N/A	Comp&Cond Assembly	1
6	8702-SA	#N/A	Shelf Assembly	1
5	8723-MA-At	#N/A	Mullion	1
4	8706GR-EA	#N/A	Evaporator Assembly	1
3	8730-MTPA-At	#N/A	Top Panel Assembly	1
2	8706-DA	#N/A	Door Assembly	1
1	87320405	MCF8732211010	Bottom Panel Assembly	1

18	W0302174-FR6A6D10	R03002000043-FCAZK1	Digital Controller	1
17	W0308019	R03008000008	Power Switch	1
16	W04098832	#N/A	Controller Bracket	1
15	W0410460	#N/A	Bottom Frame Cover	1
14	W0410446	#N/A	Left-Right Frame Cover	2
13	W0410459	#N/A	Top Frame Cover	1
12	W0402635	R06005000028	Back Barrier	1
11	85041801	#N/A	Bottom Panel Retainer	4
10	B0604433	R06001000015	3" Plate Caster W/O Brake	4

23	W0409887	R04011000107	Controller Cover	1
22	85021901	#N/A	Unit Air Baffle	1
21	W0399116	R03024000004	Power Supply/Transformer	1
20	W0409081	R04011000048	Drain Pipe Cover	1
19	W0308018	R03008000007	Light Switch	1

8733GR-MA

REV 12.2024

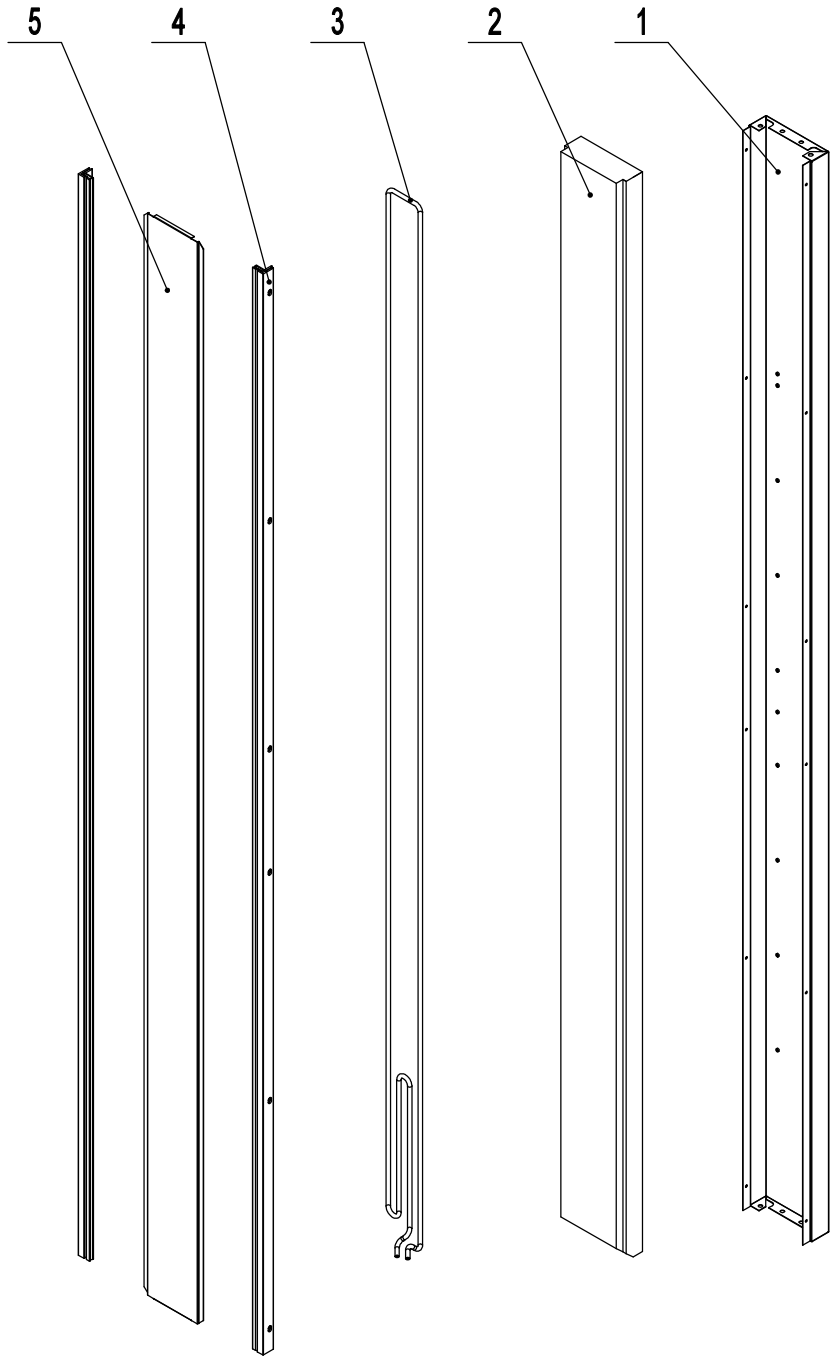

No.	Old Part #	New Part #	Part Name	Qty
5	85041111-HCB	#N/A	Mullion Front Cover	1
4	W0410976	R03010000034	Mullion Plastic Connecter	2
3	W0310110	#N/A	Mullion Heating Tube	1
2	W0499086	#N/A	Mullion Foam	1
1	85041110-430	#N/A	Mullion Back Cover	1

8733GR-MTPA

Before.04.2024

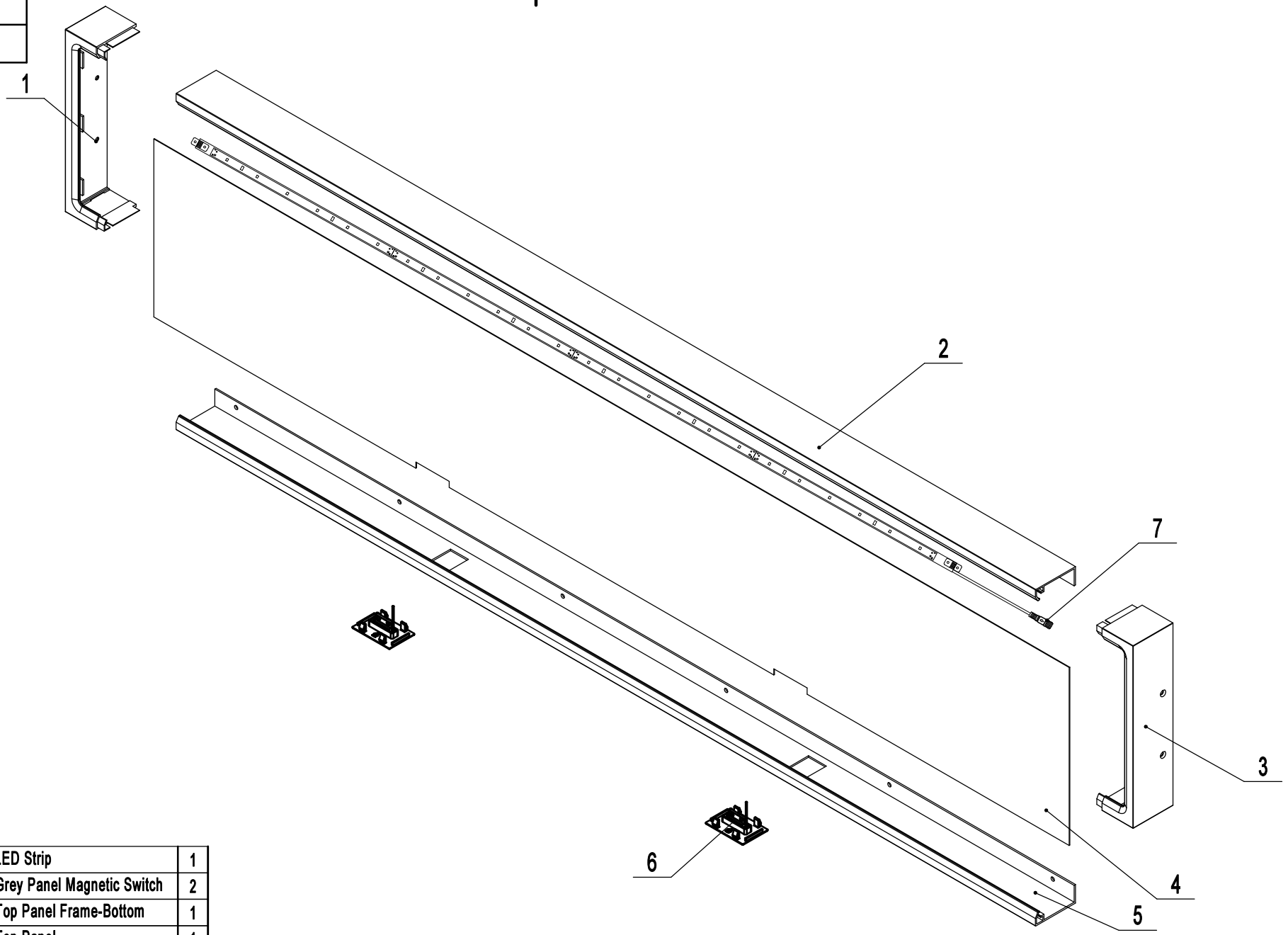

No.	Old Part #	Part Name	Qty
7	W0304082	LED Strip	1
6	W0312026	Grey Panel Magnetic Switch	2
5	W04101059	Top Panel Frame-Bottom	1
4	W041075403	Top Panel	1
3	W0409268	Top Panel Frame-Right	1
2	W04101058	Top Panel Frame-Top	1
1	W0409269	Top Panel Frame-Left	1

8733GR-MTPA

After 04.2024

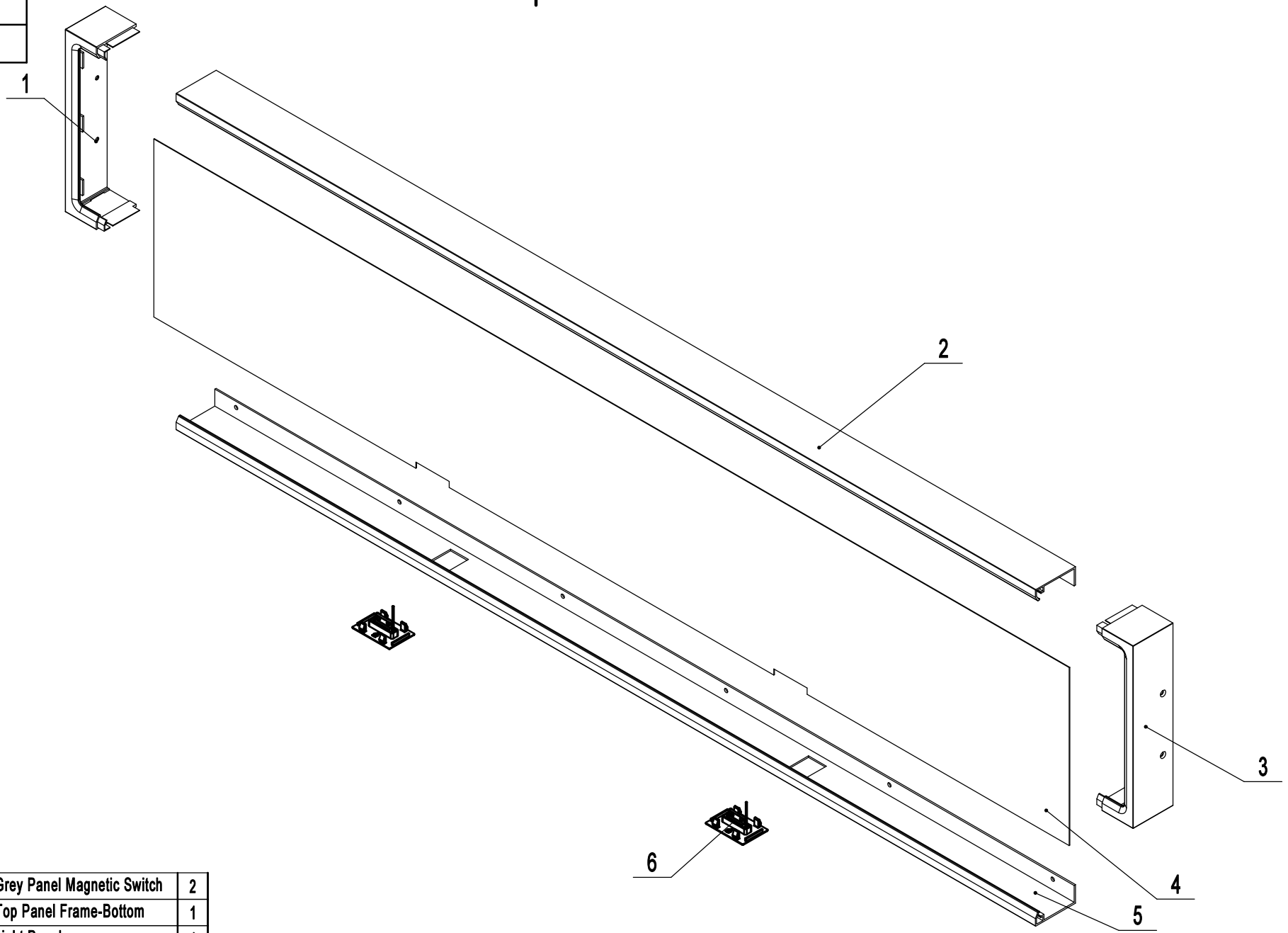

No.	New Part #	Part Name	Qty
6	R03008000024	Grey Panel Magnetic Switch	2
5	R04012001669	Top Panel Frame-Bottom	1
4	R03004000103	Light Panel	1
3	R04011000380	Top Panel Frame-Right	1
2	R04012001668	Top Panel Frame-Top	1
1	R04011000381	Top Panel Frame-Left	1

8733GR-CCA

REV 12.2024

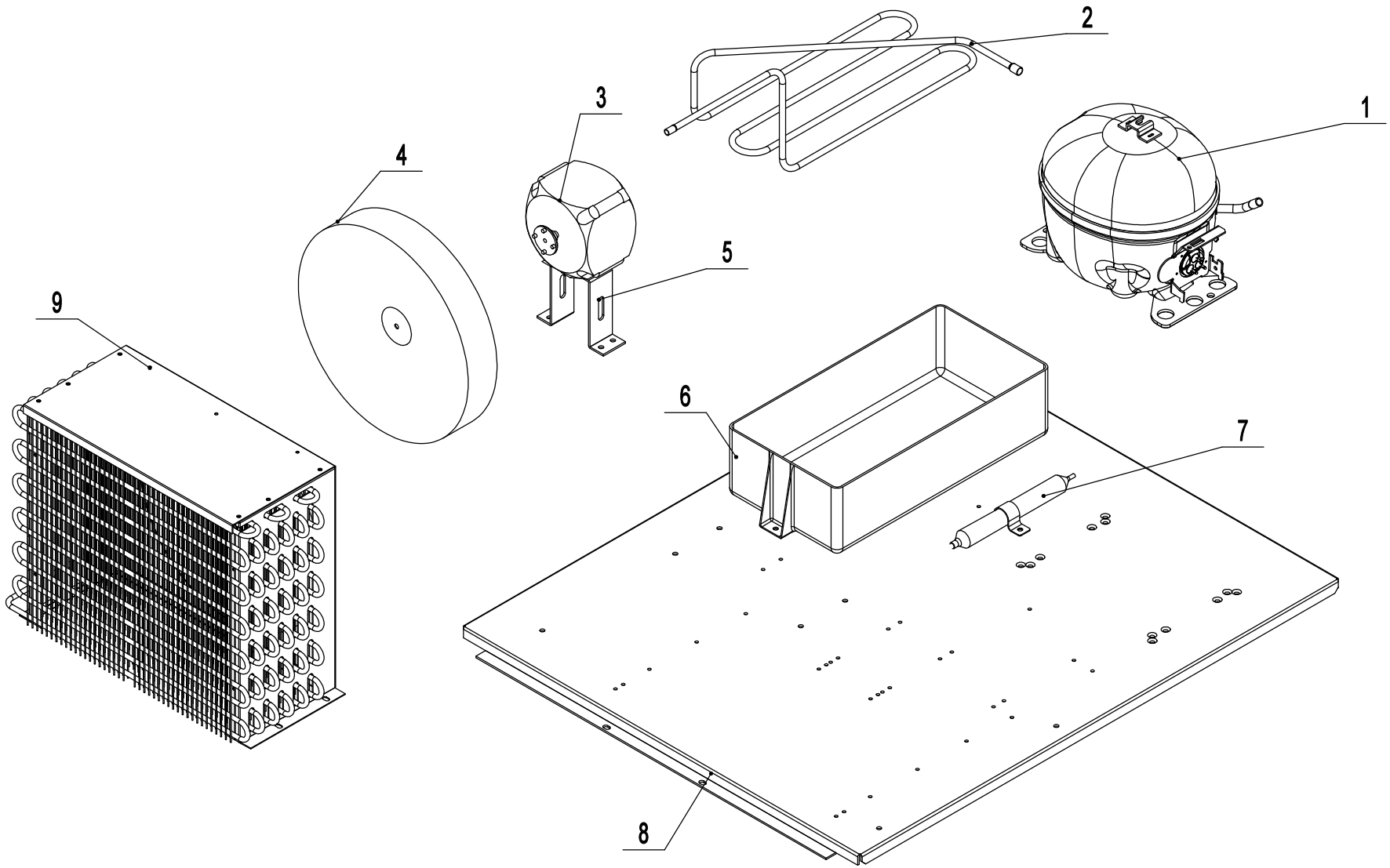

No.	Old Part #	New Part #	Part Name	Qty
5	80061601	MBF8006112001500	Condenser Fan Bracket	1
4	W0301061	R03000000018	Condenser Fan Blade	1
3	W0301905	R03001000065	Condenser Fan Motor	1
2	W0210540	#N/A	Discharge Tube	1
1	W0201042	R02000000007	Compressor	1

9	W0203074	R02007000008	Condenser	1
8	85030501	#N/A	Condensing Unit Board	1
7	W0204101	R02014000003	Filter Drier	1
6	W0411152	R04013000007	Condenser Drain Pan	1

8733GR-EA

REV 12.2024

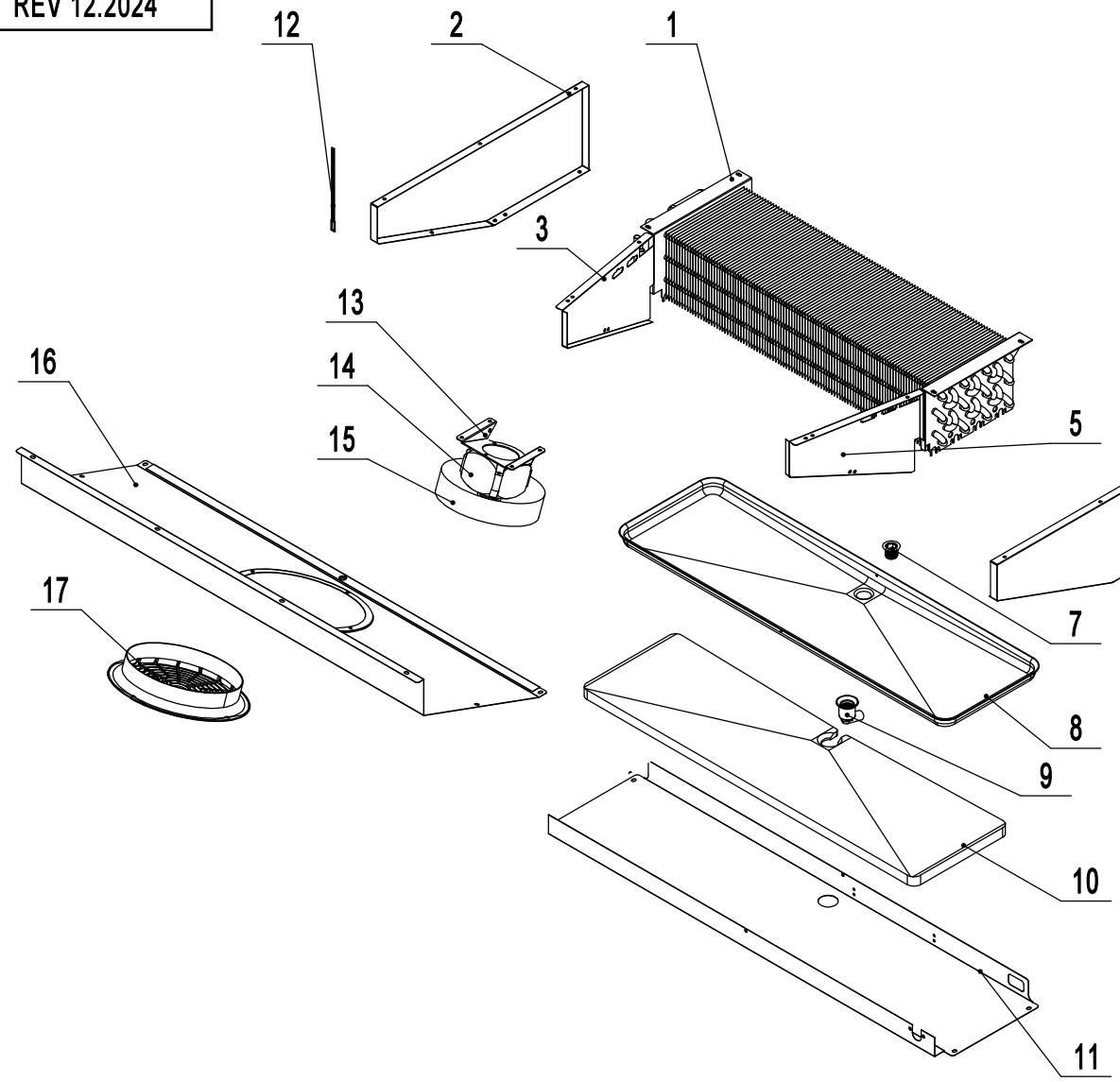

No.	Old Part #	New Part #	Part Name	Qty
17	W0409080	R04011000047	Evap Fan Shroud	1
16	87061202-430	#N/A	Evap Front Cover	1
15	W0301059	R03000000008	Evap Fan Blade	1
14	W0301904-1	R03001000099	Eavp Fan Motor	1
13	80021501	#N/A	Evap Fan Bracket	1
12	W0302316	R03019000007	Room Temp White Probe	1
11	85021201	#N/A	Drain Pan Cover	1
10	W0803014	#N/A	Drain Pan Foam	1
9	W0409858	R04008000039	Evap Drian Pan Connector Elbow	1
8	85022001	MBF8502104002600	Evap Drain Pan	1
7	W0409859	R04008000040	Evap Drain Pan Screw Connector	1
6	80021207	#N/A	Evap Right Baffle	1
5	80021204	#N/A	Right Evap Air Baffle	1
3	80021203	#N/A	Left Evap Air Baffle	1
2	80021206	#N/A	Left Evap Baffle	1
1	W0202127	R02002000036	Evaporator	1

8733GR-DA

REV 12.2024

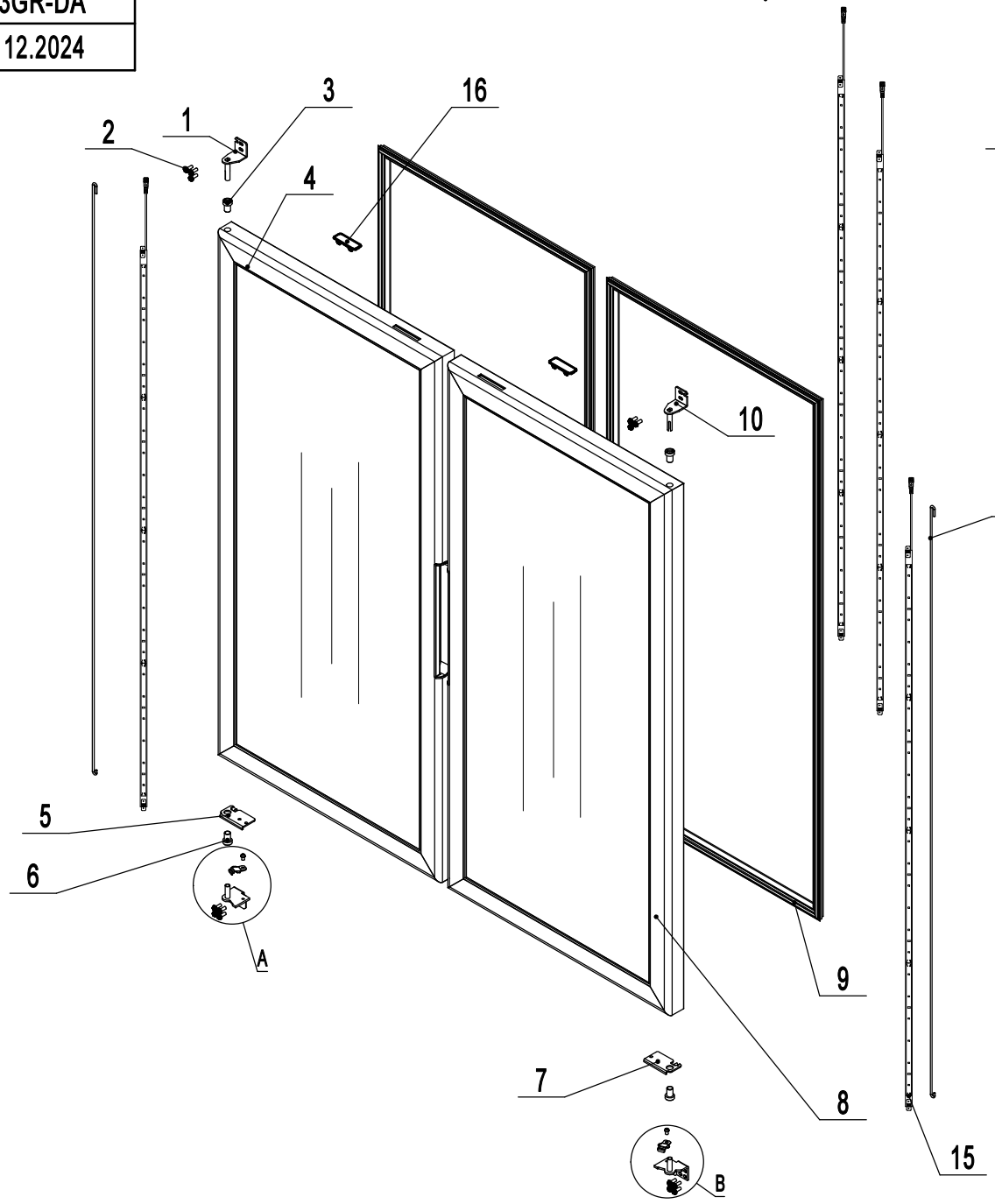

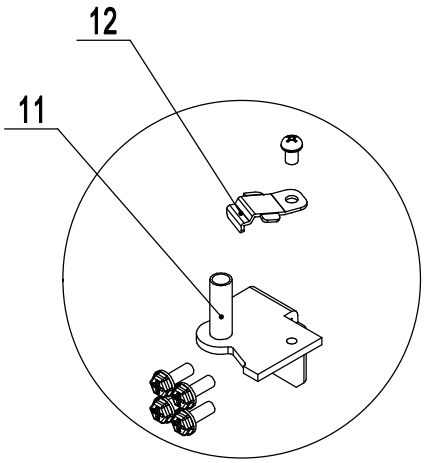

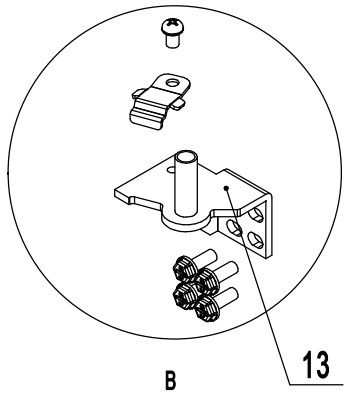

No.	Old Part #	New Part #	Part Name	Qty
16	W0409163	R04011000129	Glass Door Magnetic Switch	2
15	W0304081	R03004000007	LED Light	4
14	W0604933	R06007000090	Door Spring Bar	2
13	W0604024	R06007000041	Bottom Right Hinge	1
12	W0604038	R06007000101	Stopper Hinge	2
11	W0604025	R06007000042	Bottom Left Hinge	1
10	W0604022	R06007000039	Top Right Hinge	1
9	W0404937	R04003000068	Door Gasket	2
8	W0412812	R11006000020	Glass Right Door	1
7	W0604030	R06007000099	Door Right Stopper	1
6	W0409843	R04011000089	Bottom Hinge Sleeve	2
5	W0604031	R06007000100	Left Door Stopper	1
4	W0412811	R11006000019	Left Glass Door	1
3	W0409842	R04011000088	Bottom Hinge Sleeve	2
2	B0506077	R05006000005	M6x16 Screw	14
1	W0604023	R06007000040	Top Left Hinge	1

8733GR-SA

REV 12.2024

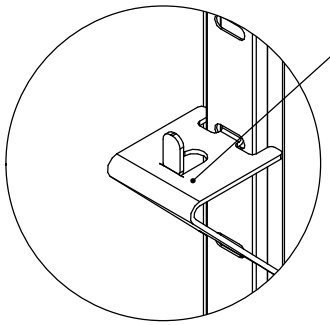

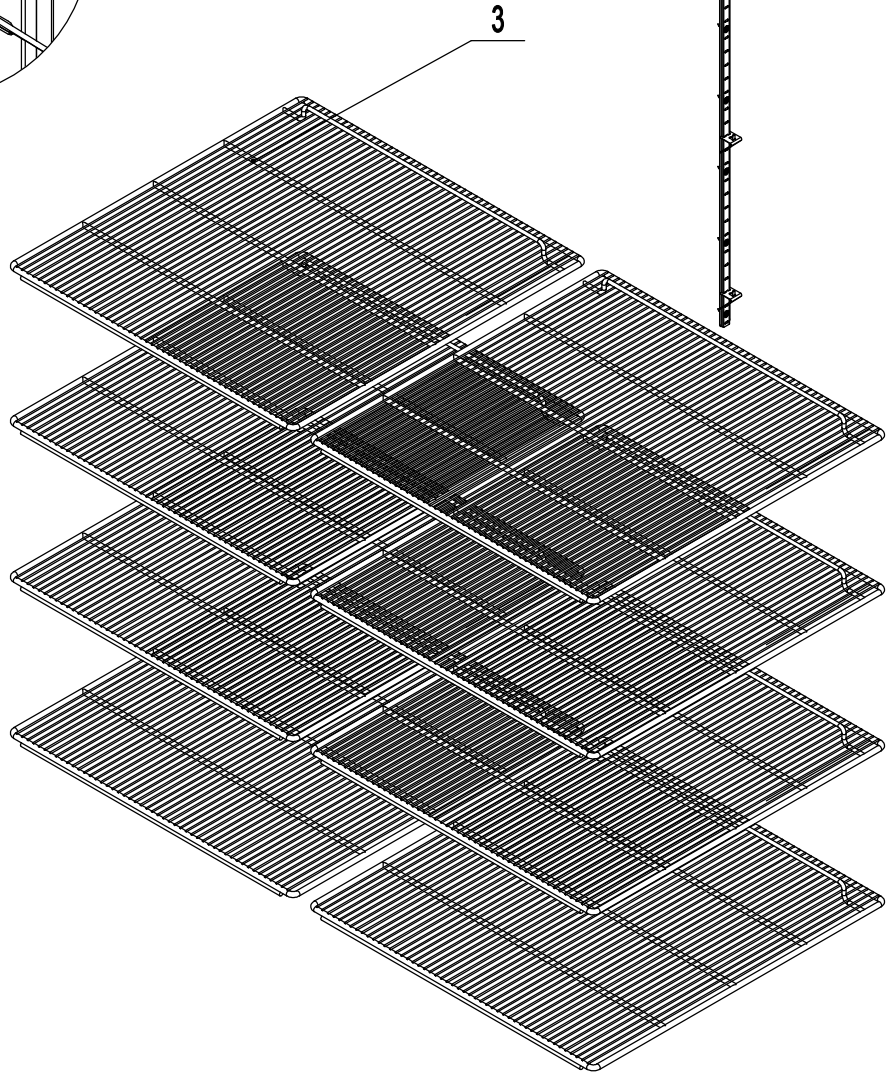

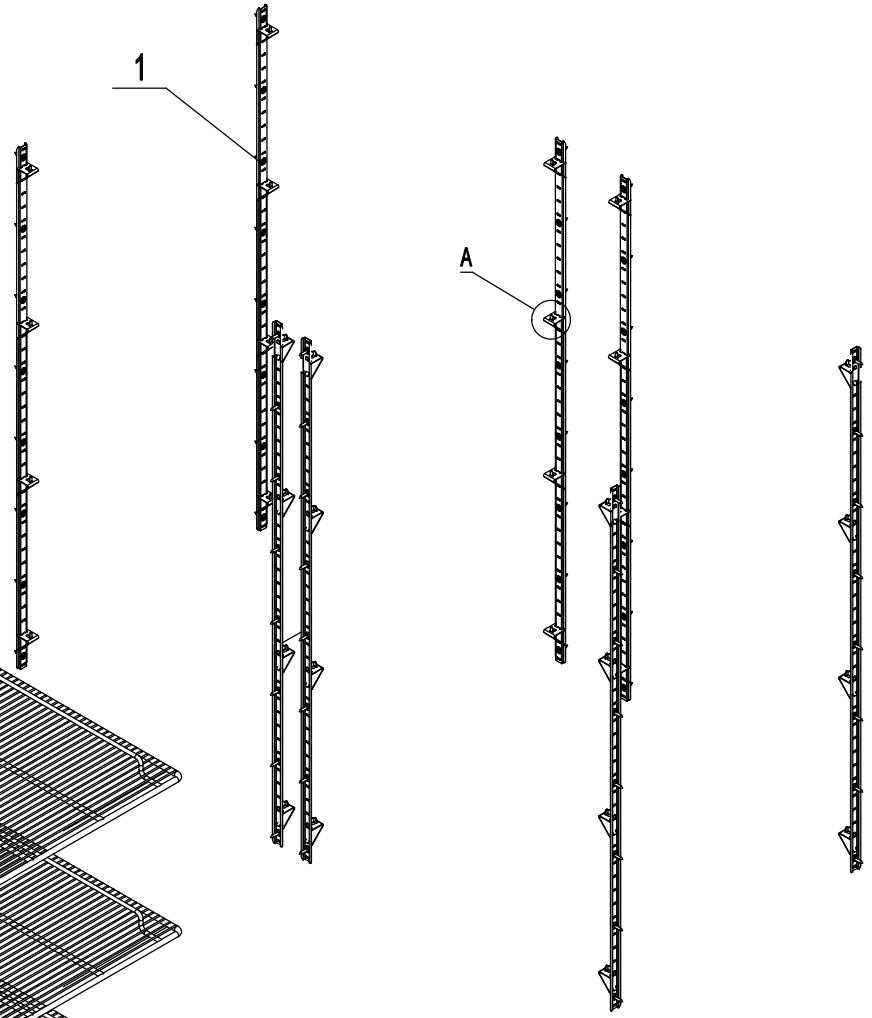

No.	Old Part #	New Part #	English Name	Qty
3	W0402197	R06004000010	Shelf 16 1/2 x 24 5/8	8
2	66490313	QPL6649115001410	Shelf Clip	32
1	80037410	MBF8003115010430	Shelf Pilaster	8