MSF3610GR

REV 02.2025

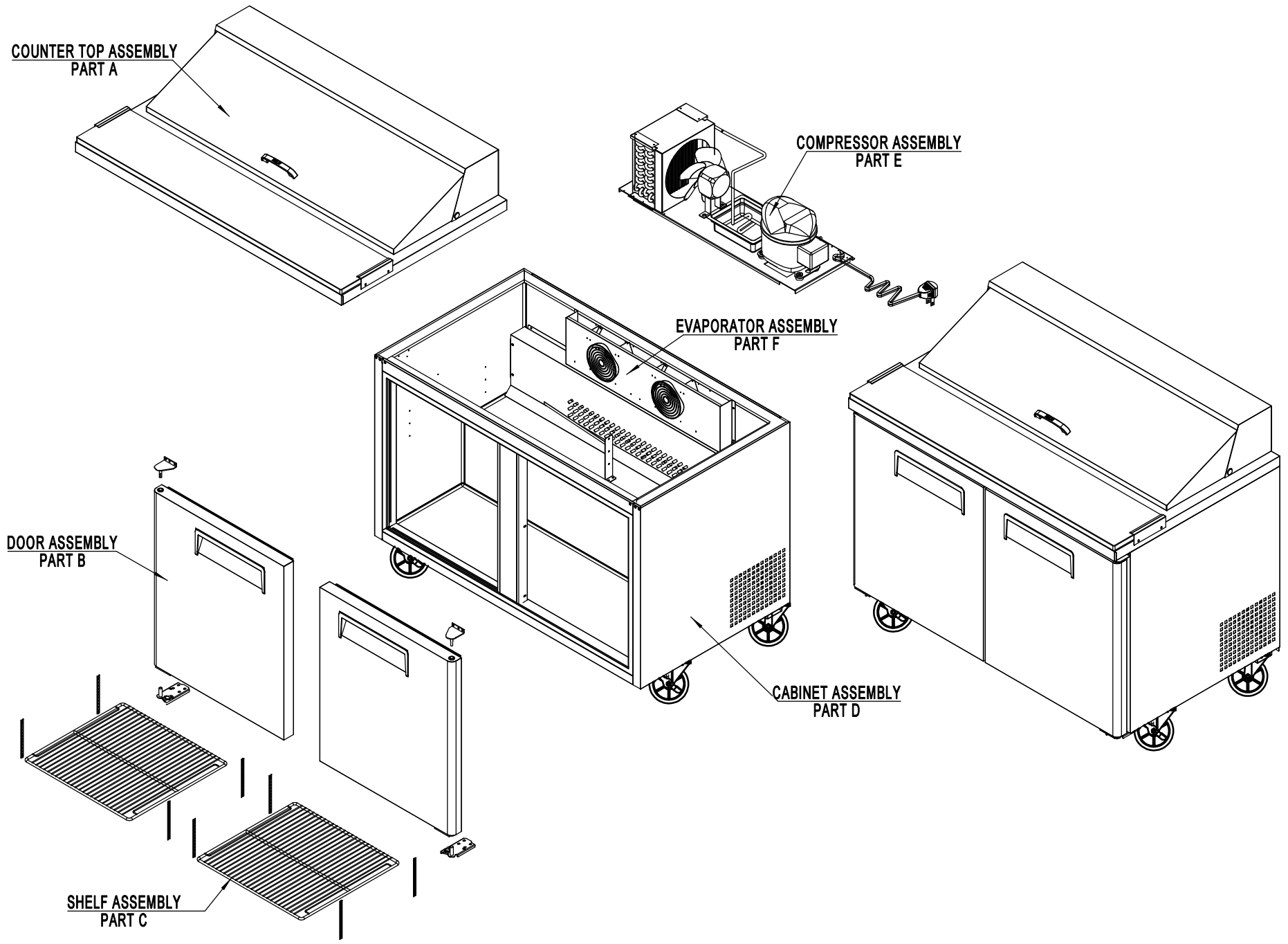

MSF3610GR

REV 02.2025

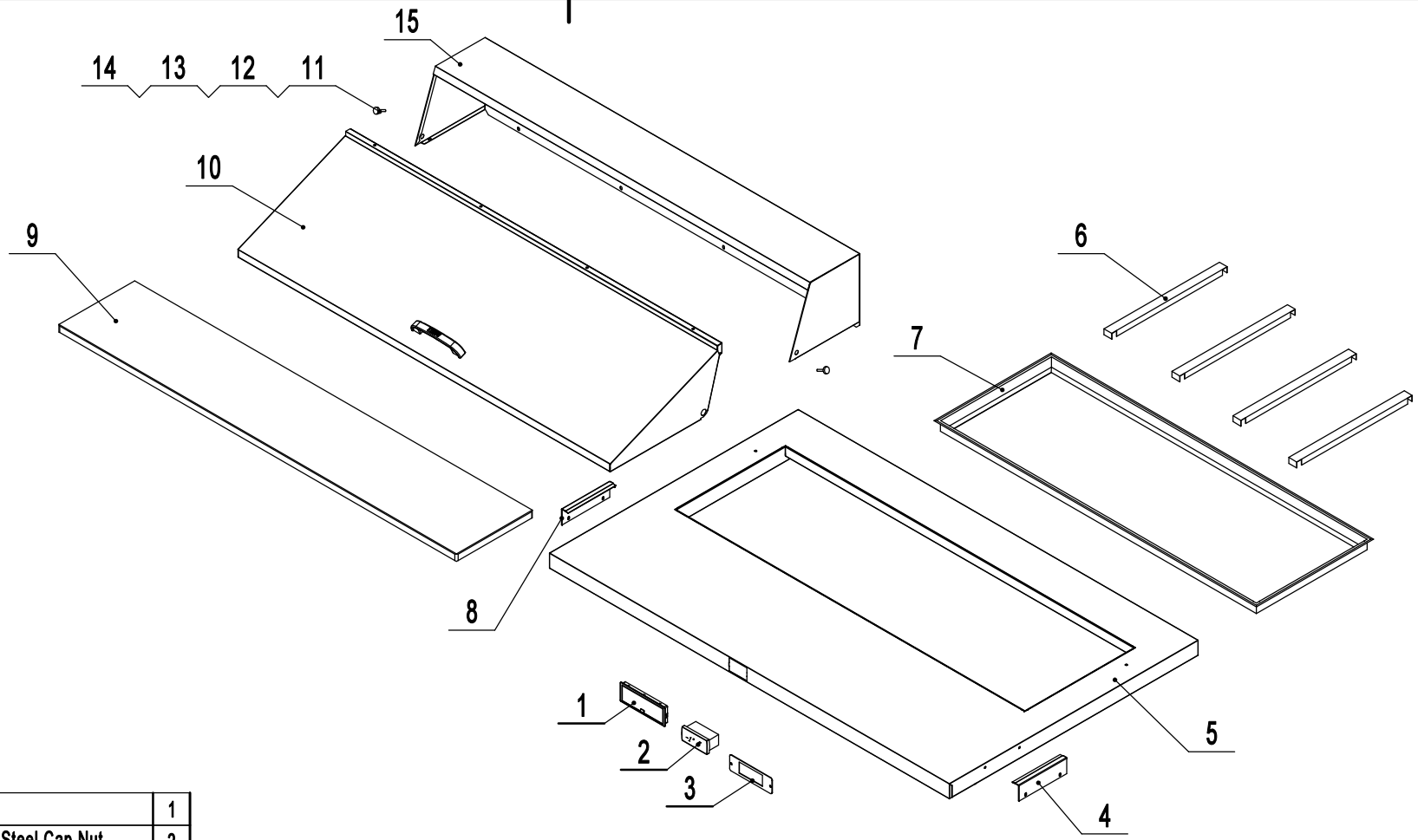

No.	New Part#	Part Name	Qty
15	MSF3610105001430	Hood	1
14	R05003000005	Stainless Steel Cap Nut	2
13	R06007000038	Lid Hinge Washer	2
12	R06007000053	Big Lid Hinge Washer	2
11	R06007000052	Lid Hinge Screw	2
10	MSF3610105002430	Lid	1
9	R04015000005	Chopping Board	1
8	MSF8302115001304	Left Chopping Board Bracket	1
7	3615AI01	Frame Support	2
6	MSF8301112002430	Divider Bar	4
5	MSF3610105005201	Counter Top Assembly	1
4	MSF8302115002304	Chopping Board Bracket	1
3	MSF8303112005430	Controller Bracket	1
2	R03018000002	Controller Display	1
1	R04011000113	Controller Cover	1

MSF3610GR

REV 02.2025

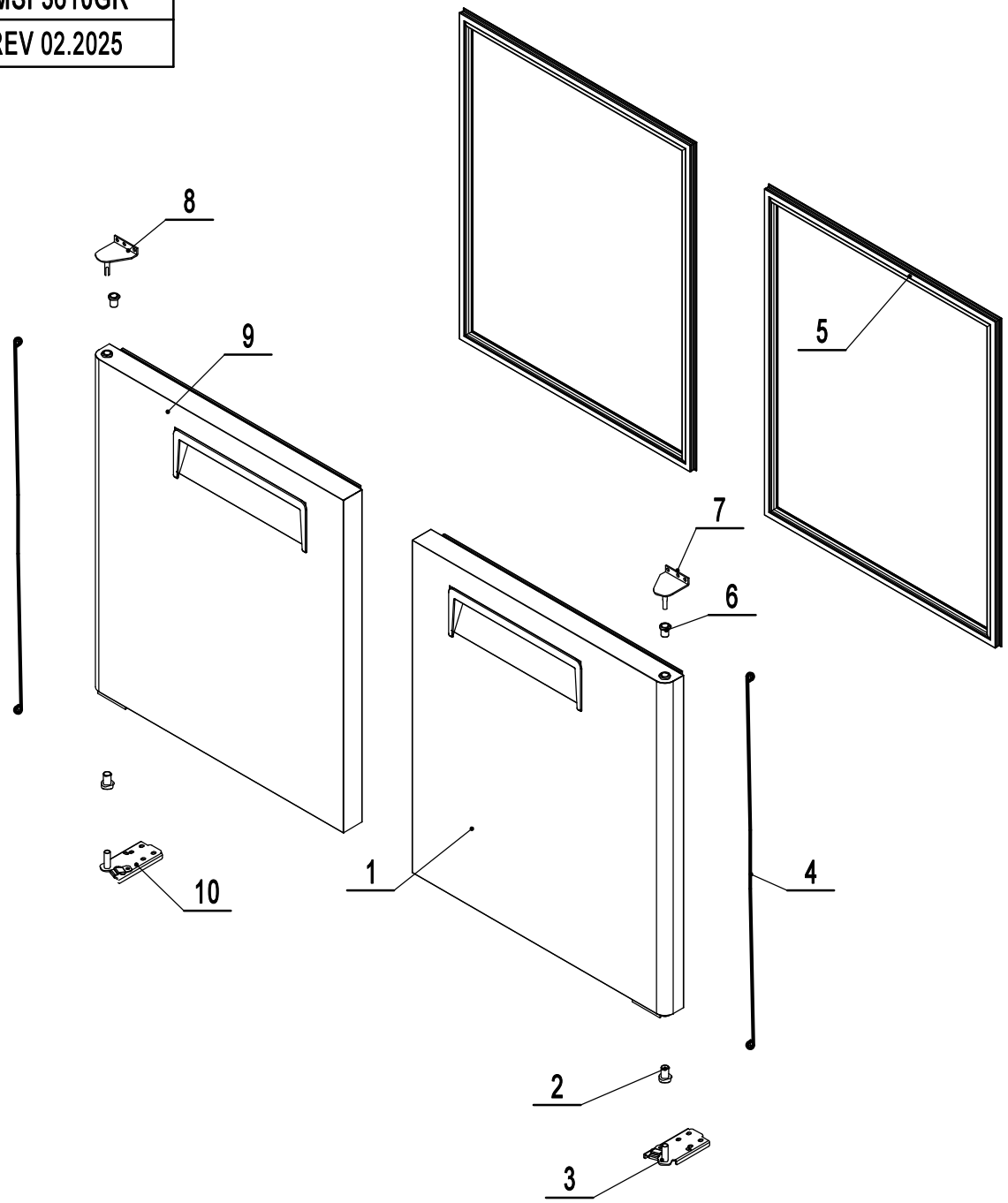

No.	New Part #	Part Name	Qty
10	R06007000046	Bottom Left Hinge	1
9	MSF3610221000	Left Door Assembly	1
8	R06007000044	Top Left Hinge	1
7	R06007000043	Top Right Hinge	1
6	R04011000091	Top Door Shaft Sleeve	2
5	R04003000066	Door Gasket	2
4	R06007000086	Door Spring Bar	2
3	R06007000045	Bottom Right Hinge	1
2	R04011000089	Bottom Door Shaft Sleeve	2
1	MSF3610221010	Right Door Assembly	1

MSF3610GR

REV 02.2025

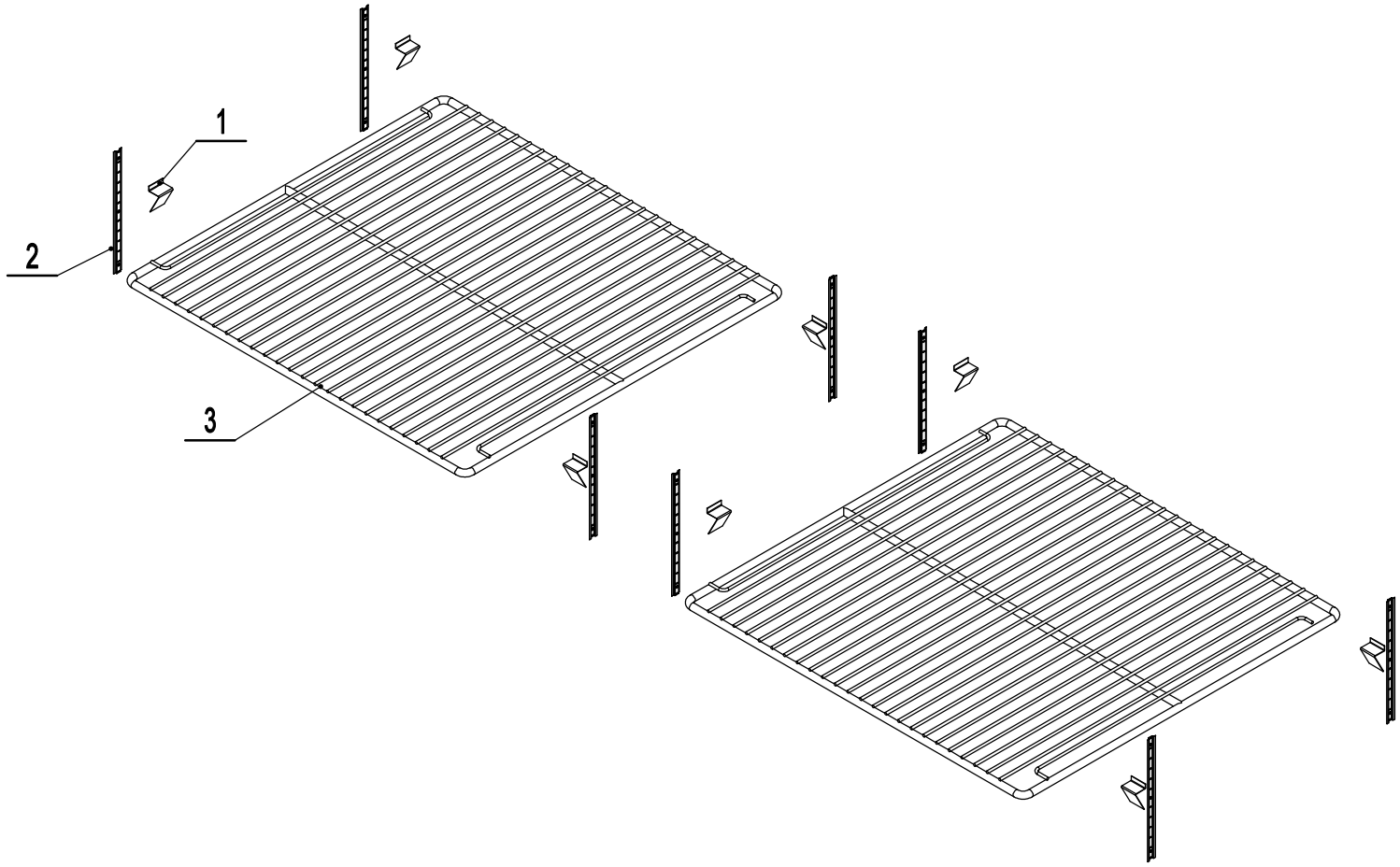

No.	New Part #	Part Name	Qty
3	R06004000077	Shelf	2
2	QPL6749115001430	Shelf Pilaster	8
1	QPL6649115001410	Shelf Clip	8

MSF3610GR

REV 02.2025

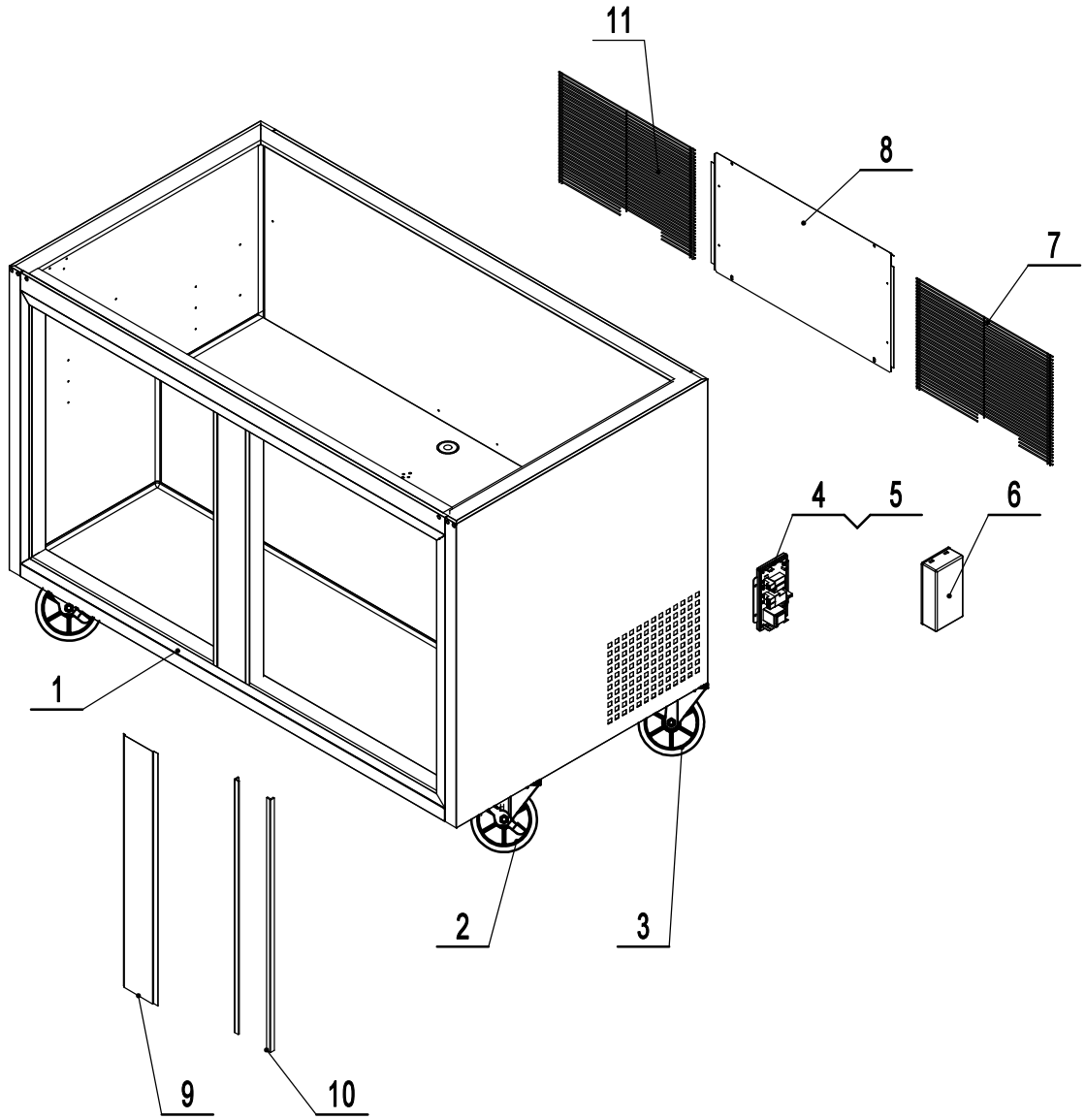

No.	New Part #	Part Name	Qty
11	R06005000041	Back Barrier	1
10	R04005000049	Middle Mullion Grille	2
9	MSF8303102001430	Mullion Front Cover	1
8	MSF8302104007500	Back Cover	1
7	R06005000040	Back Barrier	1
6	R04011000331	Controller Box Cover	1
5	R03002000089-CCAZN2	Digital Controller	1
4	R04011000332	Controller Box	1
3	R06001000015	5" Stem Caster	2
2	R06001000016	5" Stem Caster W/ Brake	2
1	MSF3610206000	Cabinet Assembly	1

MSF3610GR

REV 02.2025

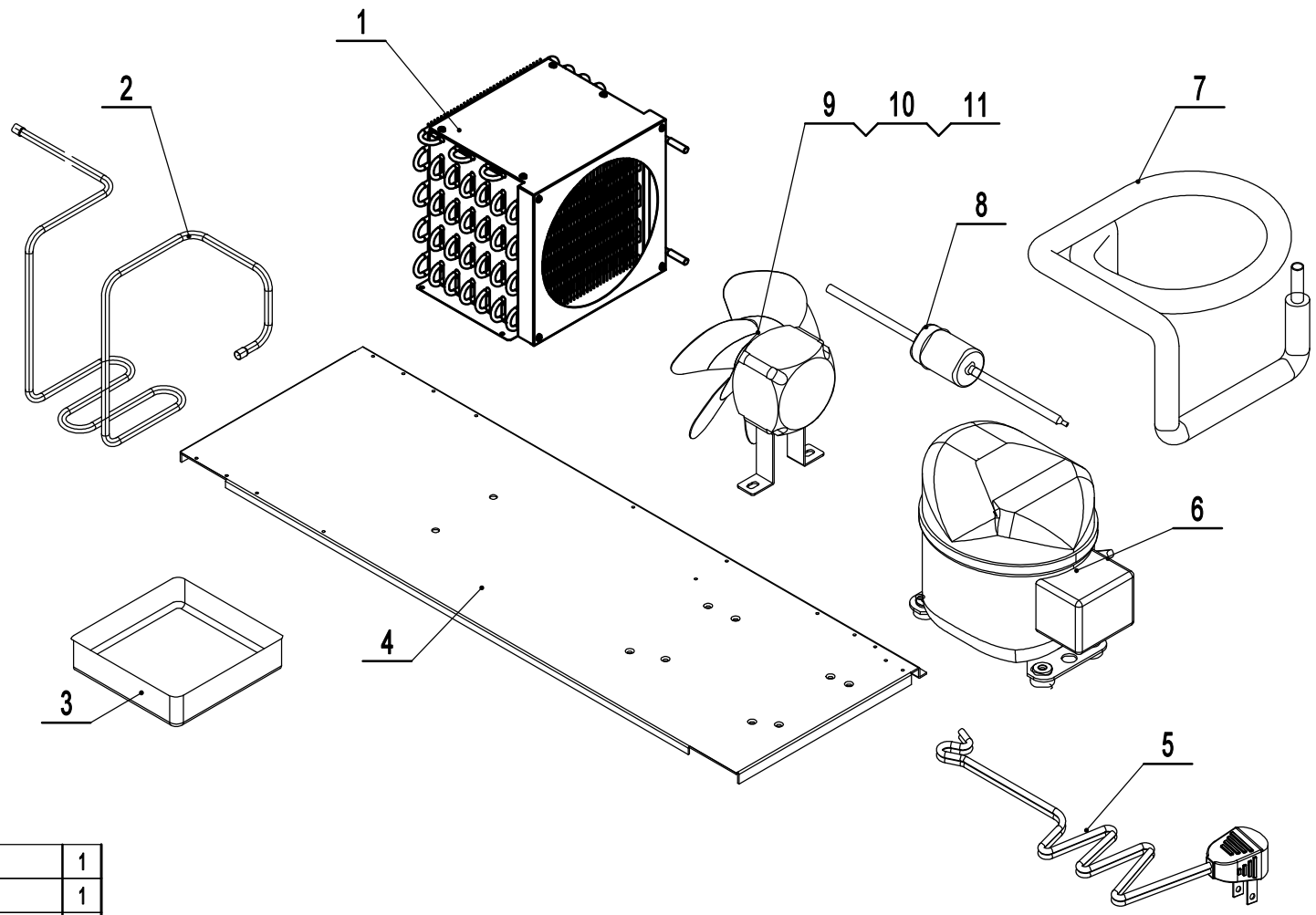

No.	New Part #	Part Name	Qty
11	R06099000057	Fan Motor Bracket	1
10	R03000000013	Evap Fan Blade	1
9	R03001000065	Condenser Fan Motor	1
8	R02014000002	Filter Drier	1
7	R02015000187	Suction Tube B	1
6	R02000000006	Compressor	1
5	R03005000012	Power Cord	1
4	MSF3610113007500	Condensing Unit Board	1
3	MSF3610103000430	Evap Drain Pan	1
2	R02015000262	Discharge Tube	1
1	R02005000014	Condenser	1

MSF3610GR

REV 02.2025

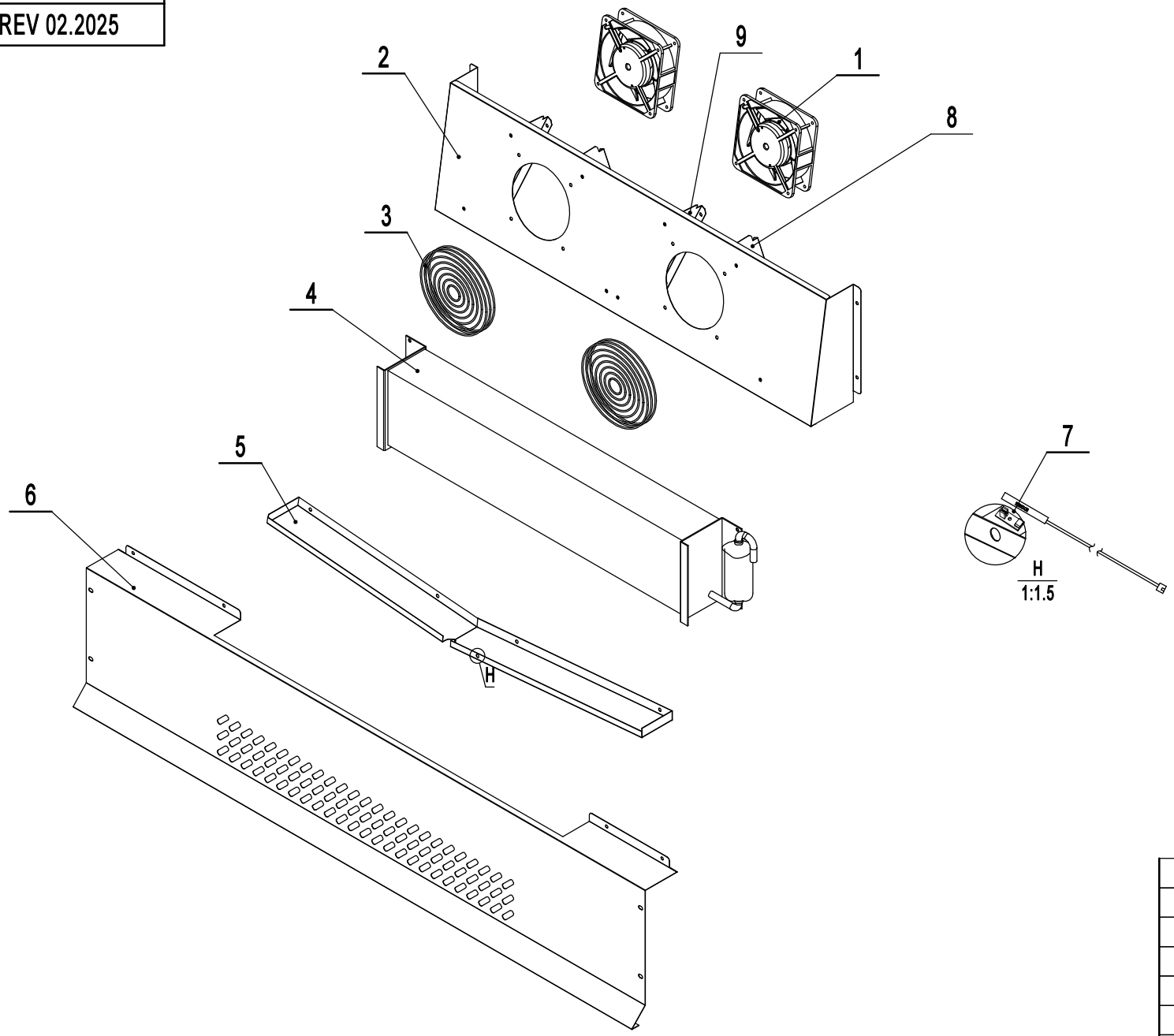

No.	New Part #	Part Name	Qty
9	MSF8302104005430	Evap Left Air Deflector	2
8	MSF8302104006430	Evap Right Air Deflector	2
7	R03019000011	Room Temp White Probe	1
6	MSF3610104001430	Evap Cover	1
5	MSF3610104002430	Evap Drain Pan	1
4	R02002000032	Evaporator	1
3	R06005000008	Evap Fan Guard	2
2	MSF3610104009430	Evap Fan Shroud	1
1	R03001000138	Evap Motor	2

MSF3610GR

After 2023.05

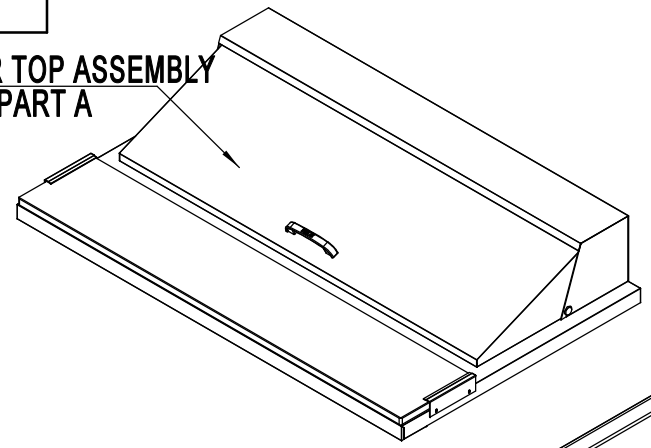

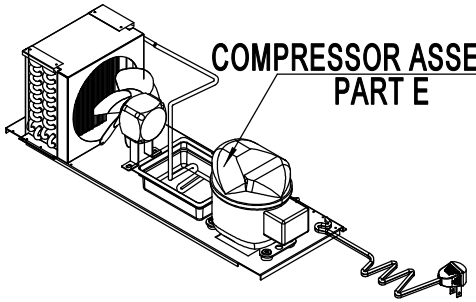

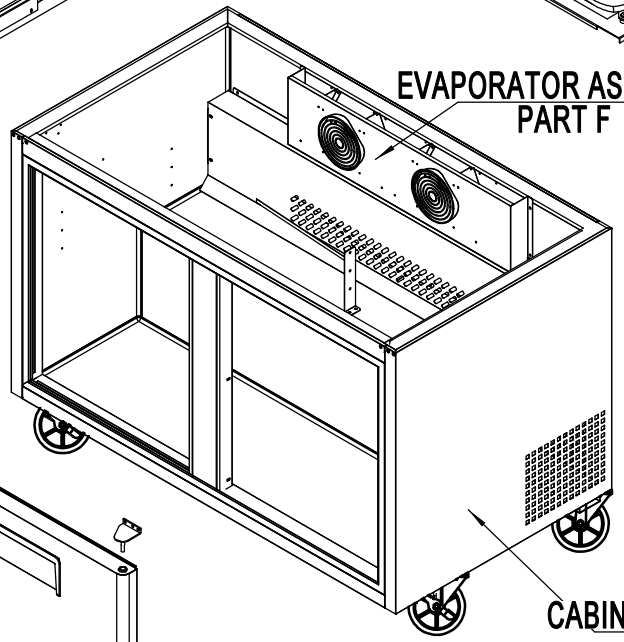

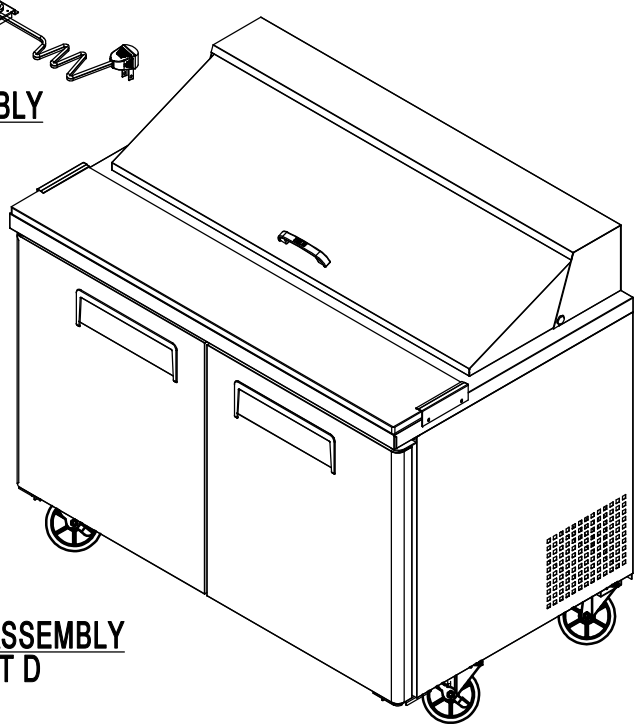

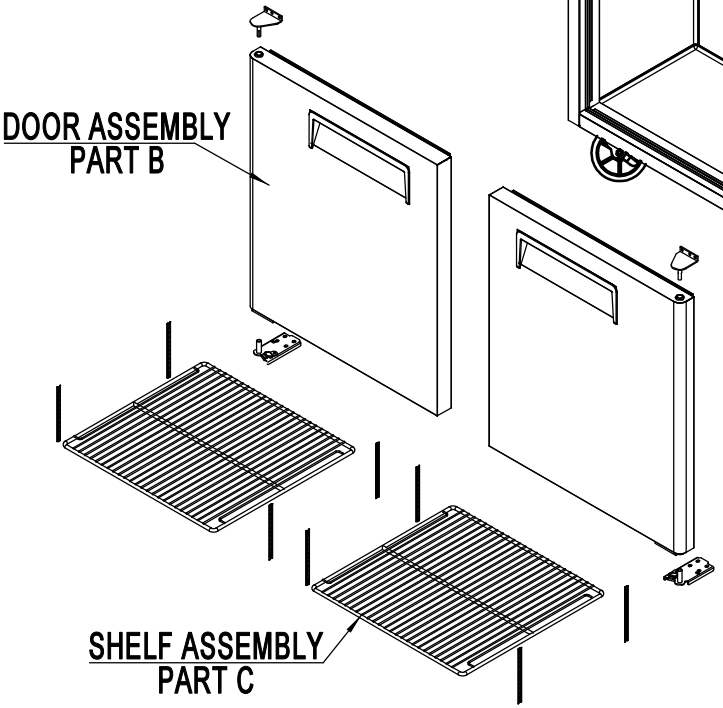

PART A

2025.2.11

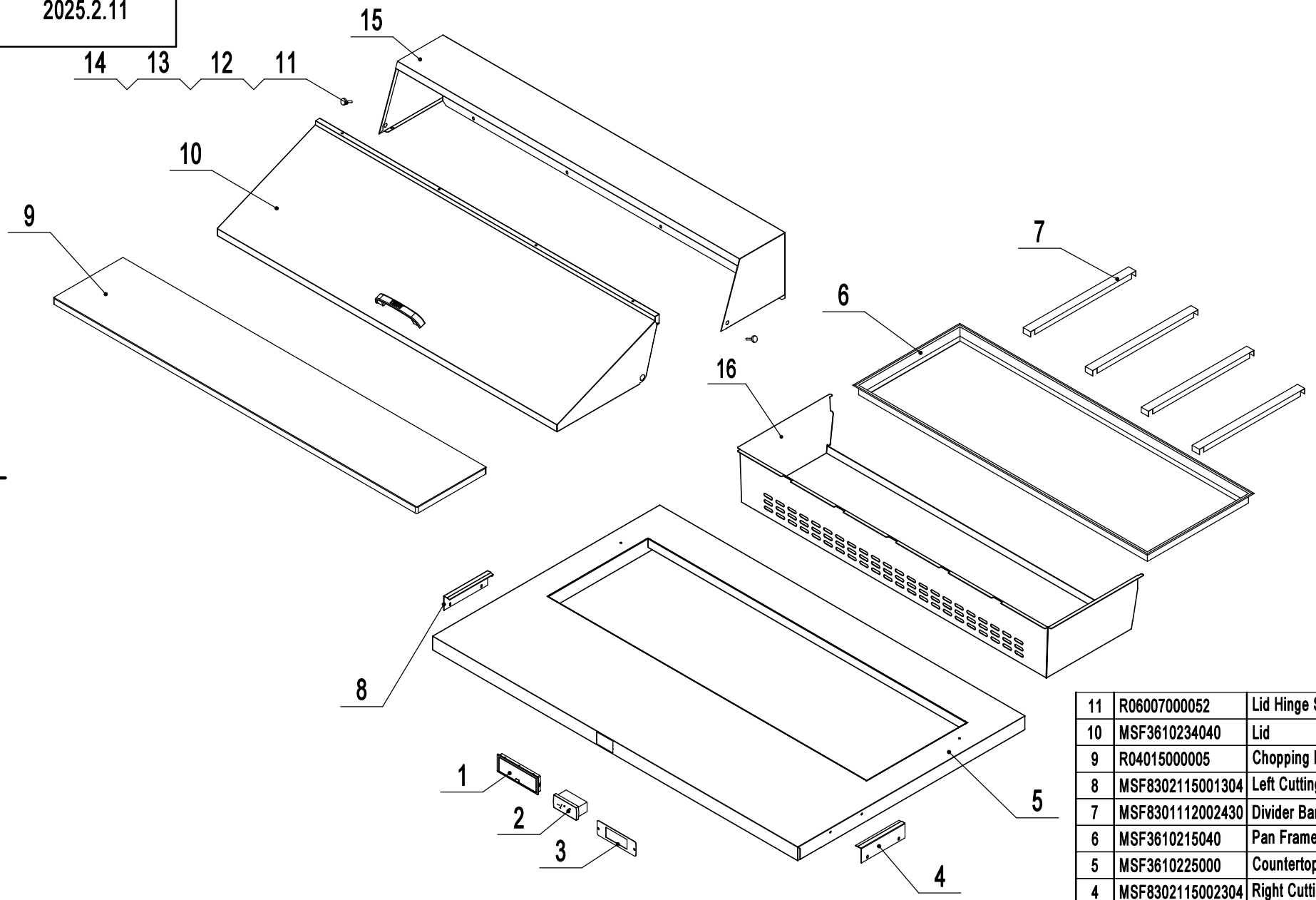

No.	Part#	Part Name	Qty
11	R06007000052	Lid Hinge Screw	2
10	MSF3610234040	Lid	1
9	R04015000005	Chopping Board	1
8	MSF8302115001304	Left Cutting Board Bracket	1
7	MSF8301112002430	Divider Bar	5
6	MSF3610215040	Pan Frame Support	1
5	MSF3610225000	Countertop	1
4	MSF8302115002304	Right Cutting Board Bracket	1
3	MSF8303112005430	Controller Bracket	1
2	R03018000002	Controller Display	1
1	R04011000113	Controller Cover	1

16	MSF3610215030	Pan Liner	1
15	MSF3610234030	Hood	1

14	R05003000005	Cap Nut	2
13	R06007000038	Lid Hinge Washer	2
12	R06007000053	Lid Hinge Large Washer	2

PART B

2025.2.11

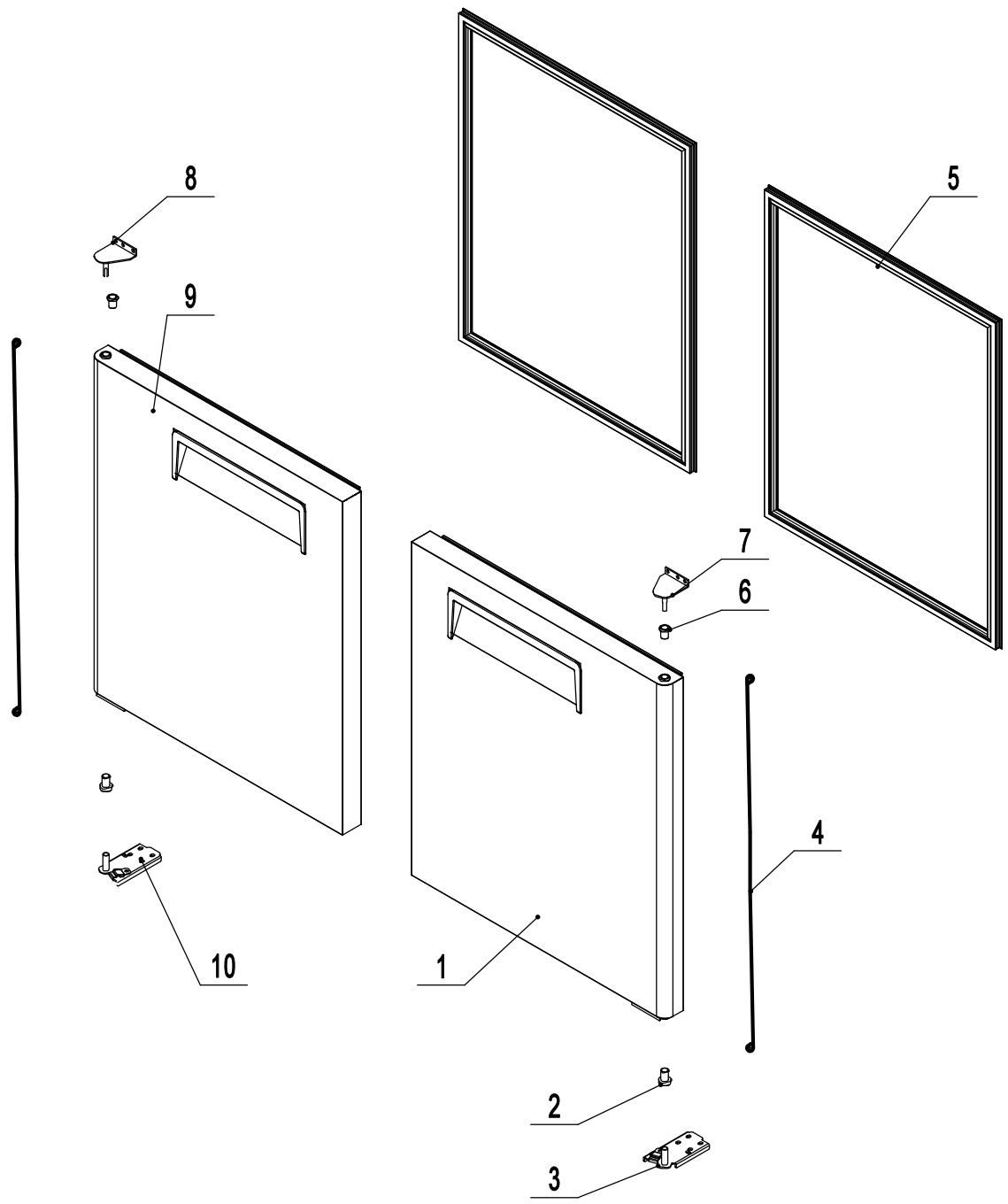

No.	Part#	Part Name	Qty
10	R06007000046	Bottom Left Hinge	1
9	MSF3610221000	Left Door Assembly	1
8	R06007000044	Top Left Hinge	1
7	R06007000043	Top Right Hinge	1
6	R04011000091	Top Door Shaft Sleeve	2
5	R04003000066	Door Gasket	2
4	R06007000086	Door Spring Bar	2
3	R06007000045	Bottom Right Hinge	1
2	R04011000089	Bottom Door Shaft Sleeve	2
1	MSF3610221010	Right Door Assembly	1

PART C

2025.2.10

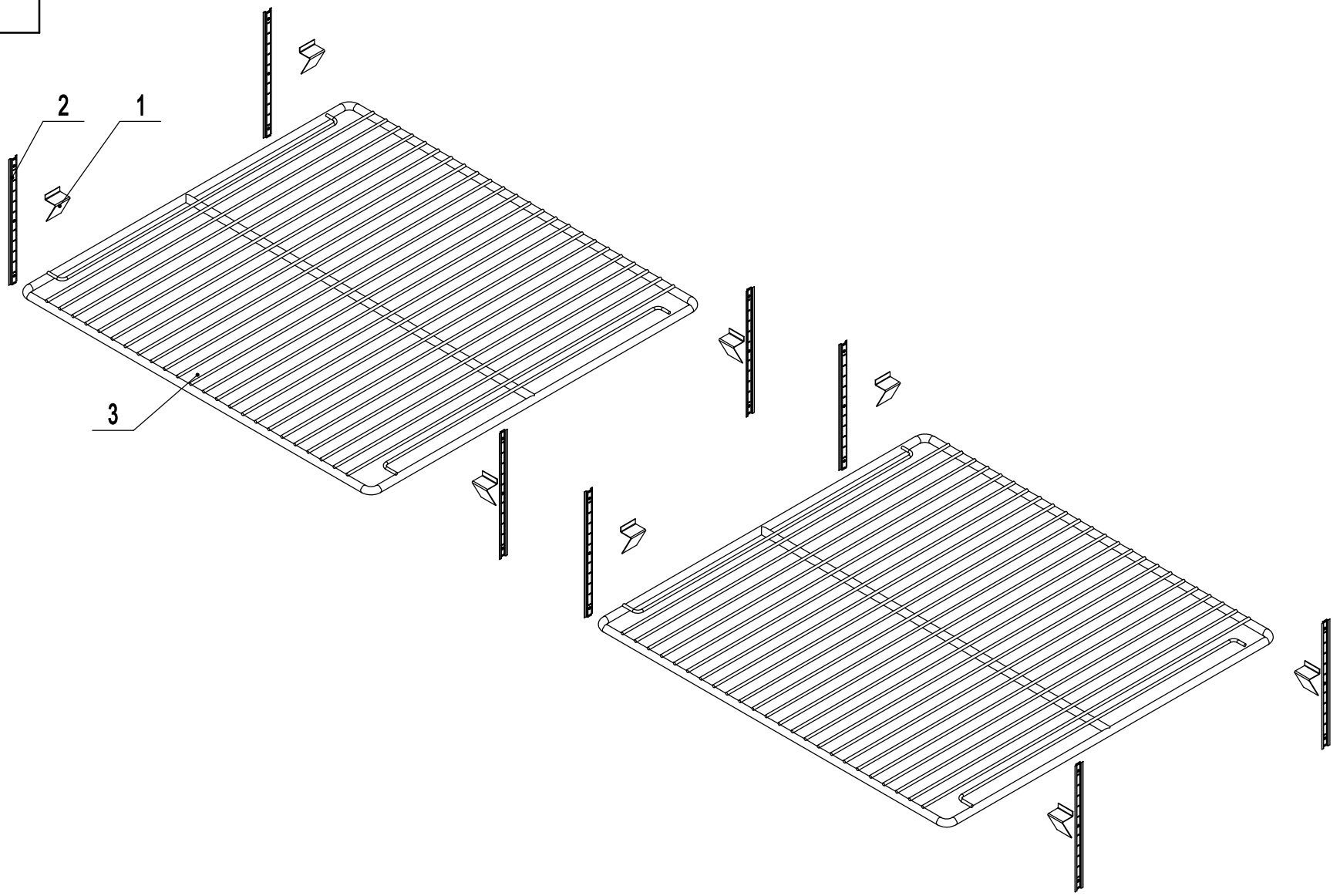

No.	Part#	Part Name	Qty
3	R06004000077	Shelf	2
2	QPL6749115001430	Shelf Pilaster	8
1	QPL6649115001410	Shelf Clip	8

PART D

2025.2.11

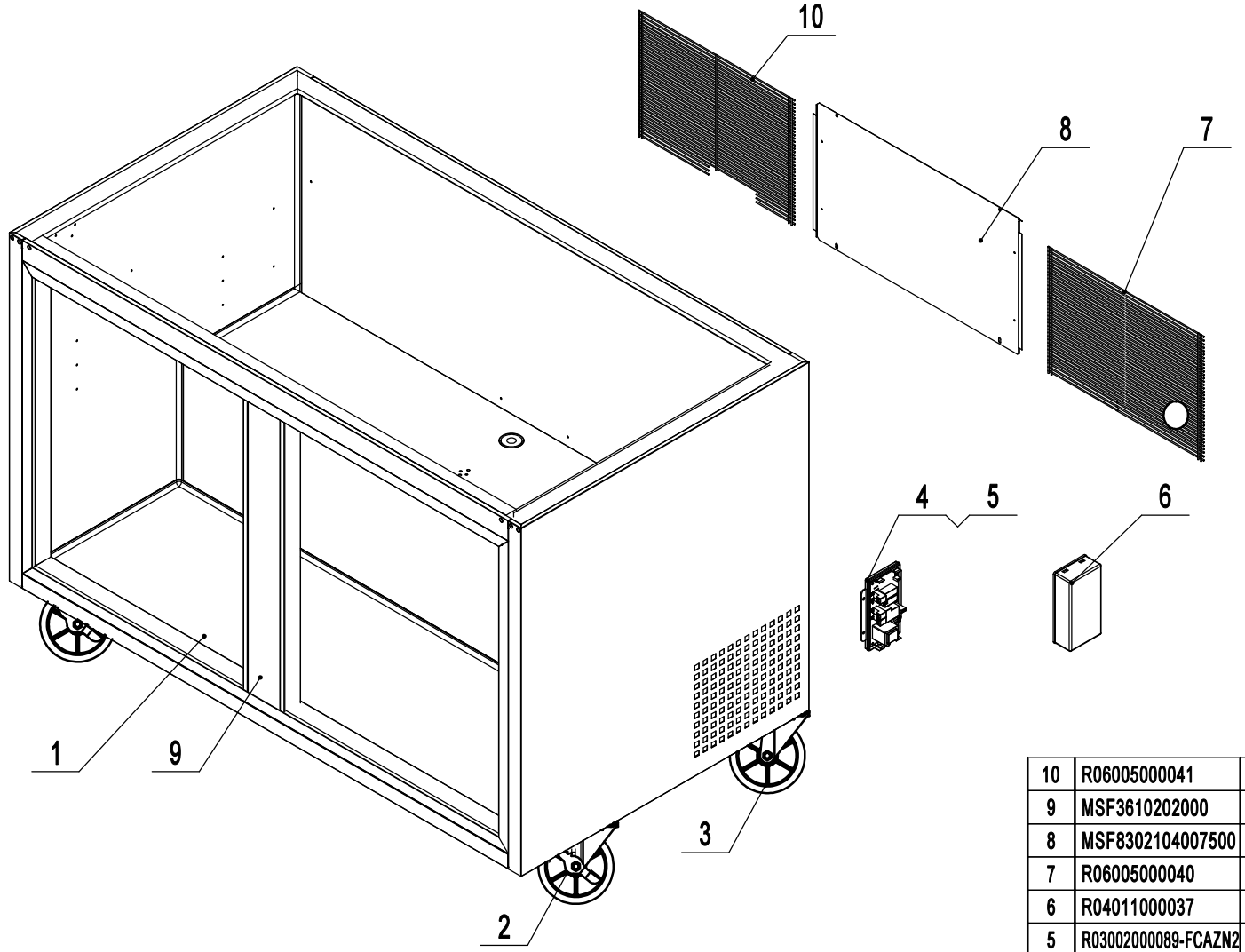

No.	Part#	Part Name	Qty
10	R06005000041	Back Barrier	1
9	MSF3610202000	Mullion	1
8	MSF8302104007500	Back Cover	1
7	R06005000040	Back Barrier	1
6	R04011000037	Controller Box Cover	1
5	R03002000089-FCAZN2	Digital Controller	1
4	R04011000036	Controller Box	1
3	R06001000015	3" Plate Caster W/O Brake	2
2	R06001000016	3" Plate Caster W/ Brake	2
1	MSF3610206000	Cabinet Assembly	1

PART E

2025.2.11

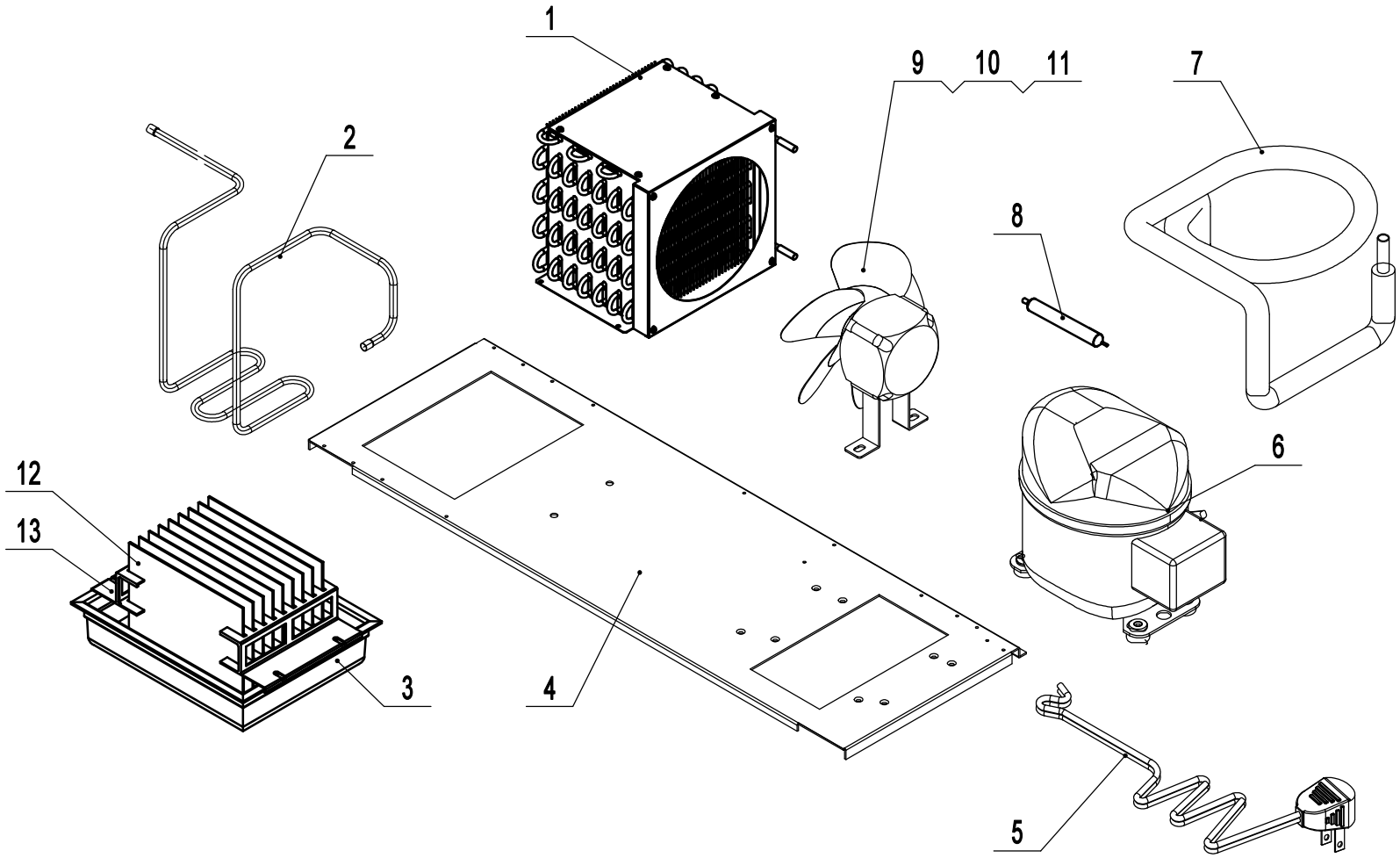

No.	Part#	Part Name	Qty
13	MSF3610113007500	Wicking Paper Bracket	1
12	R04099000011	Wicking Paper	9
11	R06099000057	Fan Motor Bracket	1
10	R03000000013	Evap Fan Blade	1
9	R03001000100	Condenser Fan Motor	1
8	R02014000001	Filter Drier	1
7	R02015000187	Suction Tube B	1
6	R02000000006	Compressor	1
5	R03005000012	Power Cord	1
4	MSF3610113007500	Condensing Unit Board	1
3	MSF3610103000430	Evap Drain Pan	1
2	R02015000262	Discharge Tube	1
1	R02005000014	Condenser	1

PART F

2025.2.11

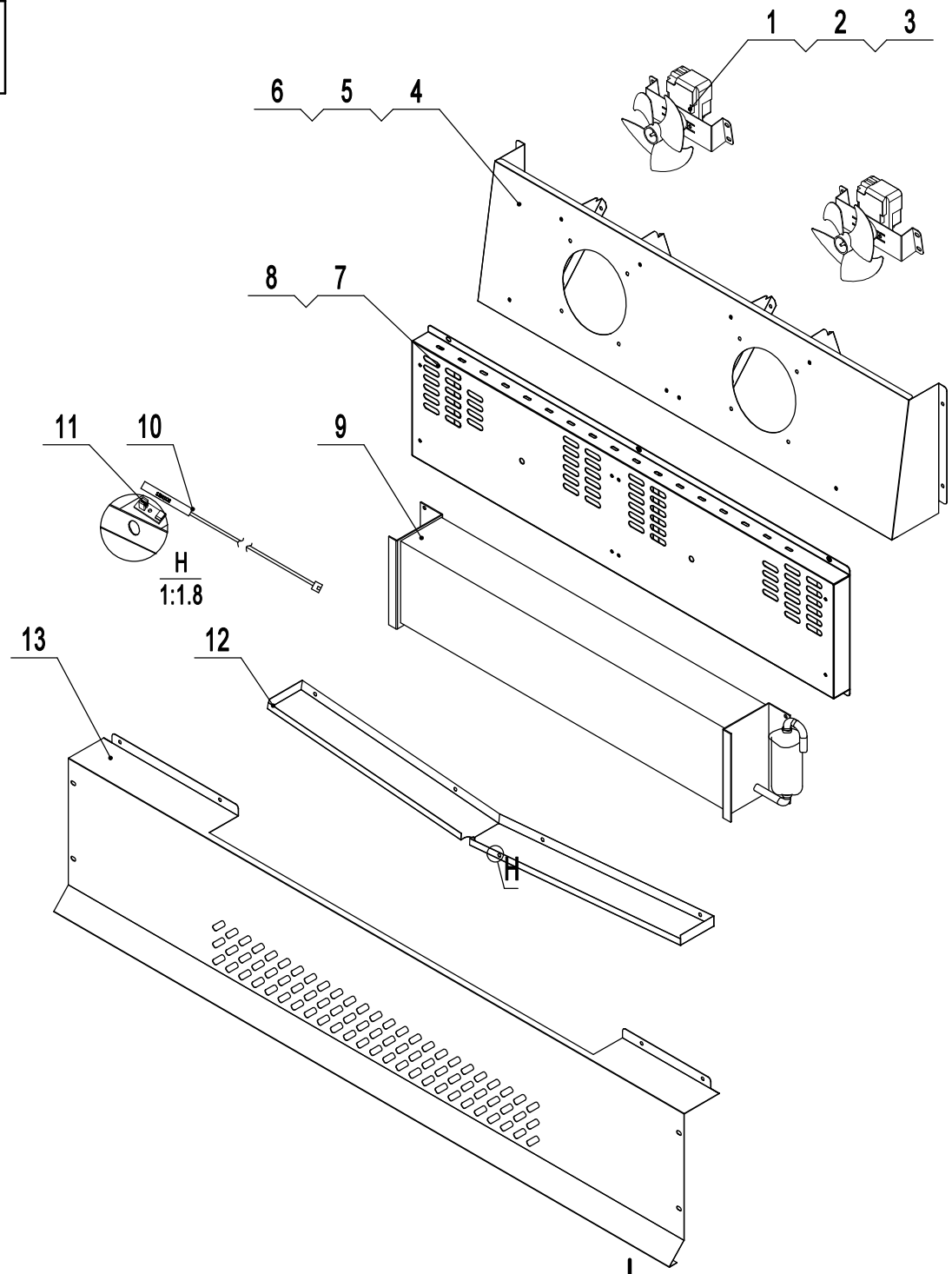

No.	Part#	Part Name	Qty
13	MSF3610104001430	Evap Cover	1
12	MSF3610104002430	Evaporator Drain Pan	1
11	R04011000080	Probe Clip	1
10	R03019000011	Room Temp White Probe	1
9	R02002000032	Evaporator	1
8	MSF8308104001430	Cabinet Air Deflector	4
7	MSF3610104006430	Cabinet Air Deflector	1
6	MSF8302104006430	Evap Right Air Deflector	2
5	MSF8302104005430	Evap Left Air Deflector	2
4	MSF3610104003430	Evap Fan Shroud	1
3	MSF3610112004304	Evap Motor Bracket	2
2	R03000000001	Evap Fan Blade	2
1	R03001000009	Evap Fan Motor	2