RDCS-60

REV.06.2024

Glass and Control Part
Part A

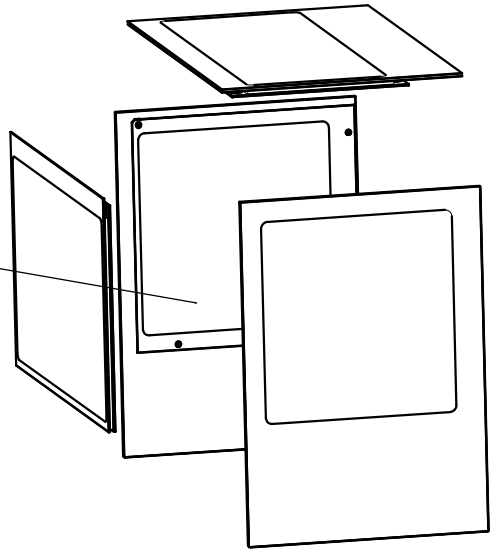



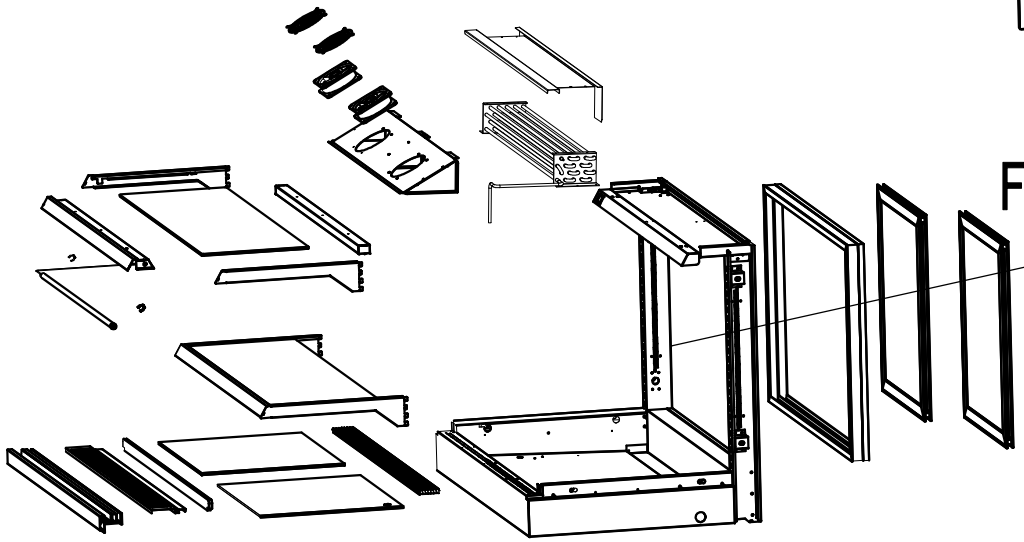

Frame and Evap Part
Part C



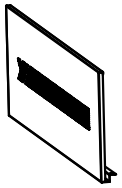

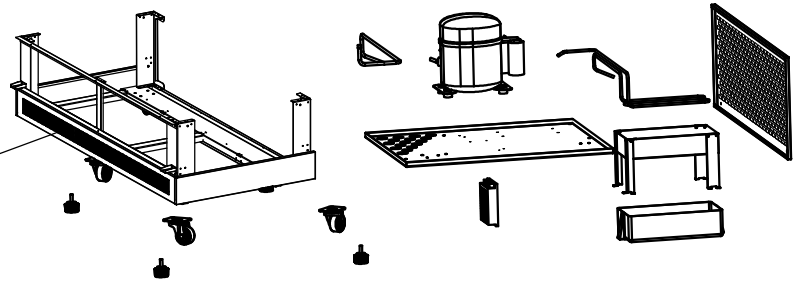

Base and Cond Part
Part C

Part A

REV.06.2025

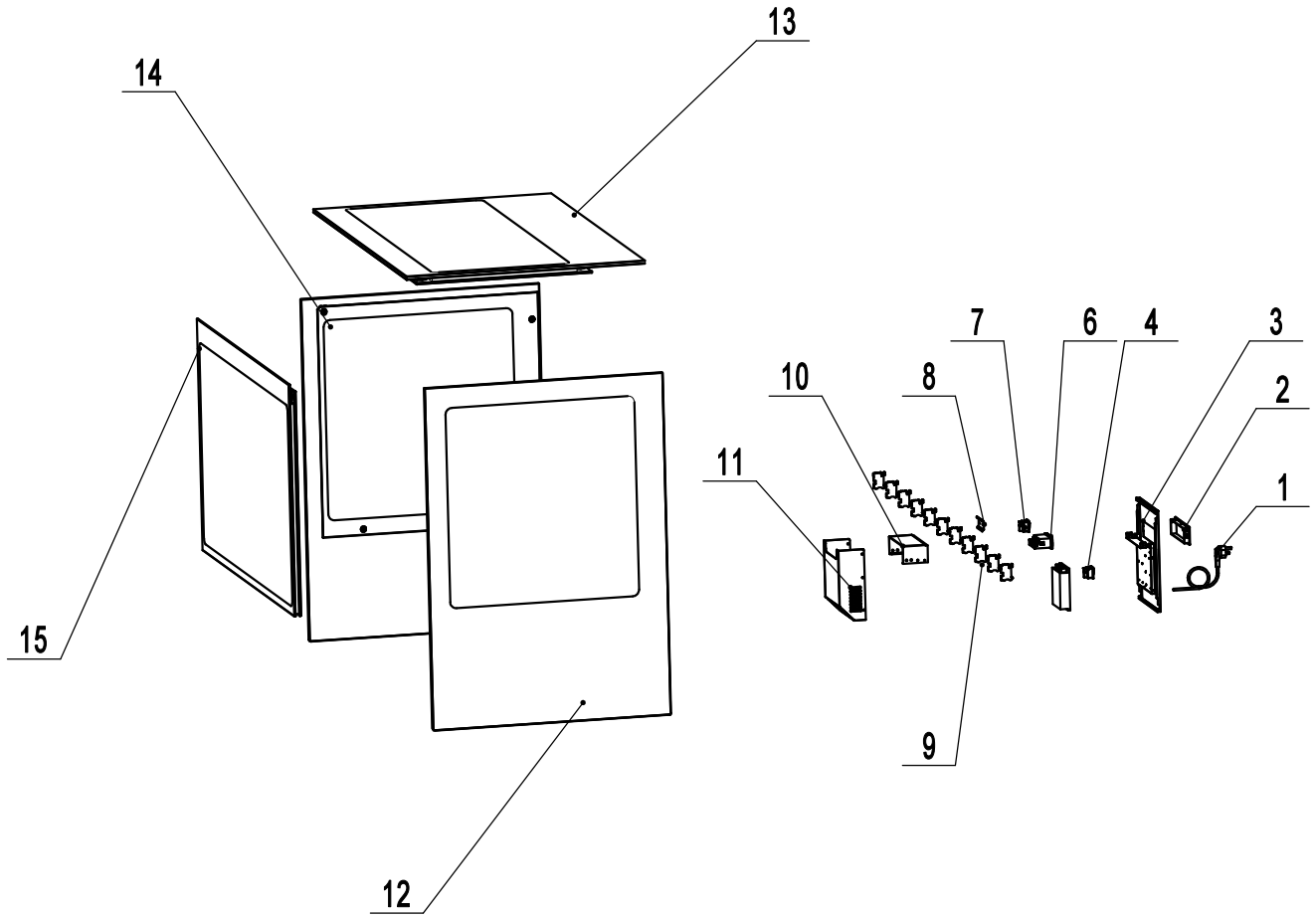

No.	Part#	Part Name	Qty
15	R11999000239	Front Glass	1
14	R11999000210	Left Glass	1
13	R11999000257	Top Glass	1
12	R11999000211	Right Glass	1
11	WDF7301112024501	Controller Bracket	1
10	R04011000292	Controller Box	1
9	R03009000089	Terminal block	11
8	R06008000003	Guide	1
7	R03008000022	Switch	1
6	R03002000068	Controller	1
4	R03008000008	Power Switch	1
3	WDF7301112022201	Controller Plate	1
2	R04011000102	Controller Cover	1
1	R03005000012	Power Cord	1

Part B

REV.06.2025

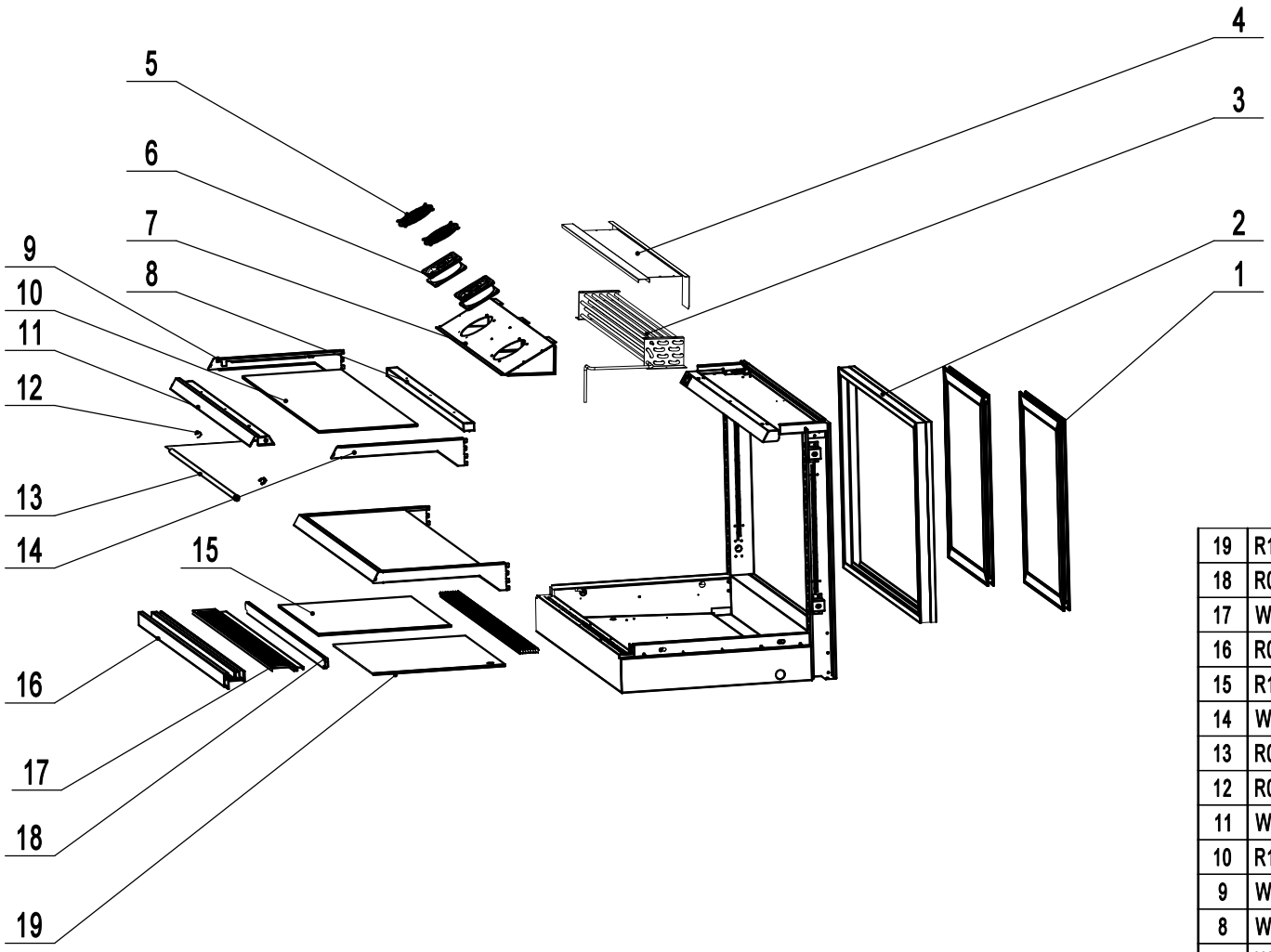

No.	Part#	Part Name	Qty
19	R11002000124	Right Bottom Plate	1
18	R04099000080	Unit Air Baffle	1
17	WDF7311109006921	Air Hood	1
16	R04012000557	Front Cover	1
15	R11002000117	Left Bottom Plate	1
14	WDF7301109012922	Right Plate Support	2
13	R03004000053	LED Light	2
12	R03004000036	Light Fastener	4
11	WDF7311109010921	Light Cover	2
10	R11002000139	Plate	2
9	WDF7301109011922	Left Plate Support	2
8	WDF7311112001501	Crossbeam	2
7	WDF7311104001201	Fan Motor Front Cover	1
6	R03001000015	Eavp Fan Motor	2
5	R06005000008	Evap Fan Guard	2
4	WDF7311109005201	Cover Support	1
3	R02002000073	Evaporator	1
2	R04012000552	Door rail	2
1	R11006000189	Door	2

Part C

REV.06.2025

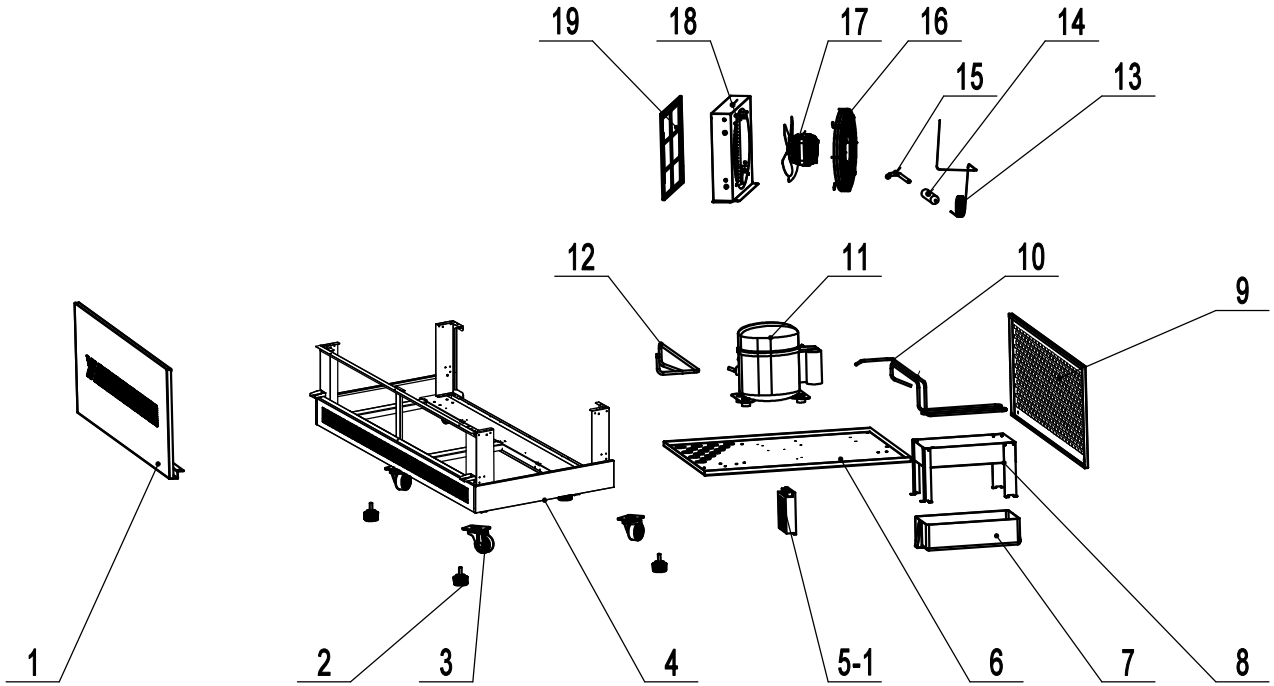

19	R06005000005	Condenser Dust Cover	1
18	R02006000005	Condenser	1
17	R03001000065	Condenser Fan Motor	1
16	R06099000094	Fan Guard	1
15	R02015000692	Condenser Outlet Tube	1
14	R02014000003	Filter Drier	1
13	R02017000022	Capillary Tube	1
12	R02015001482	Suction Tube	1
11	R02000000038	Compressor	1
10	R02015000690	Evaporation Coil	1
9	WDF7311112006201	Back Panel	1
8	R06099000045	Drain Pan Cover	1
7	R04013000010	Drain Pan	1
6	WDF7301103002501	Base board	1
5-3	R03024000012	Power Supply	1
5-2	R03024000016	Power Supply	1
5-1	R03024000010	Power Supply	1
4	WDF7311213010	Bottom Frame	1
3	R06001000057	Caster	4
2	R06001000021	Leg	4
1	WDF7311112004201	Front Panel	1
No.	Part#	Part Name	Qty