eurodib
M60A220ETL



Power up your kitchen with Eurodib's M60A220ETL Planetary Mixer. Built for demanding, high-volume operations, this heavy-duty mixer delivers unmatched strength and precision for large-scale food preparation. Engineered for durability and efficiency, it is ideal for bakeries, restaurants, and catering businesses that require reliability, versatility, and consistent results.

FEATURES

- High-capacity design perfect for large-scale preparation
- Heavy-duty performance ensuring consistent results in demanding kitchens
- Precision mixing for superior texture and quality
- Ideal for bakeries, restaurants and catering operations requiring efficiency and versatility
- Compatible with #12 meat grinder attachment
- This mixer is suited for **occasionally** mixing bread or pizza dough

1 YEAR WARRANTY
PARTS AND LABOR

CAPACITY CHART

Bowl size:	63.5 qt. (60 L)
Egg whites:	2 qt. (1.9 L)
Marshmallow:	3.3 lb (1.5 kg)
Cake batter:	44 lb (20 kg)
Cookie dough:	29.5 lb (13.5 kg)
Bread dough:	
Flour:	26.5 lb (12 kg)
Dough*:	44 lb (20 kg)
Pizza dough:	
Flour:	26.5 lb (12 kg)
Dough**:	42 lb (19 kg)

*70% AR (Hydration ratio) ** 60% AR (Hydration ratio)

SPECIFICATIONS

Power: 220 V – 14 A – 3 PH

Watts: 2220/2800 W

Capacity: 60 qt. (56 L)

Bowl depth: 19" (48 cm)

Bowl diameter: 20" (50 cm)

Mixing speed: 73/109/143/216 rpm

Max. kneading cap: 44 lb/h (20 kg/h)

Dimensions:
- Length: 44.8" (114 cm)
- Width: 28" (71 cm)
- Height: 45.2" (115 cm)

Connection: HARDWIRED 3-PHASE

Net weight: 1078 lb (488 kg)

Shipping dimensions:
- Length: 45" (114 cm)
- Width: 30" (76 cm)
- Height: 63" (160 cm)

Shipping weight: 1285 lb (582 kg)

Included accessories
- Bowl
- Hook
- Beater
- Whip
- Trolley

c ETL LISTED US
Intertek

Babak Food Equipment
(604) 566-9747 · babakfoodequipment.com

Authorized Eurodib dealer · view the full Eurodib range

eurodib

M60A220ETL

TOP VIEW

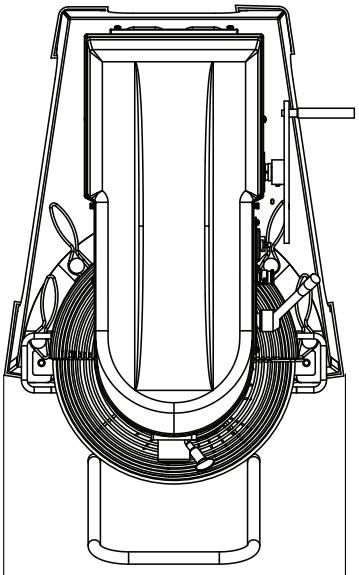

FRONTAL VIEW

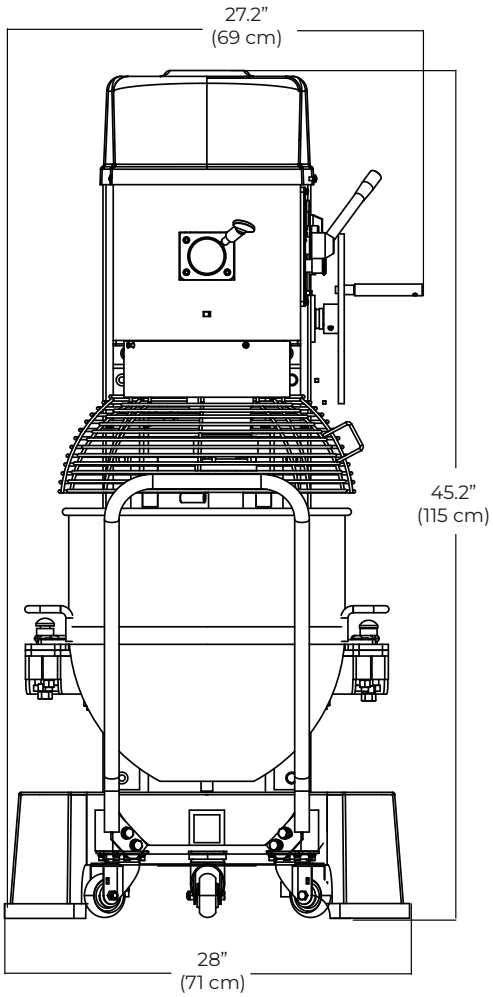

LEFT VIEW

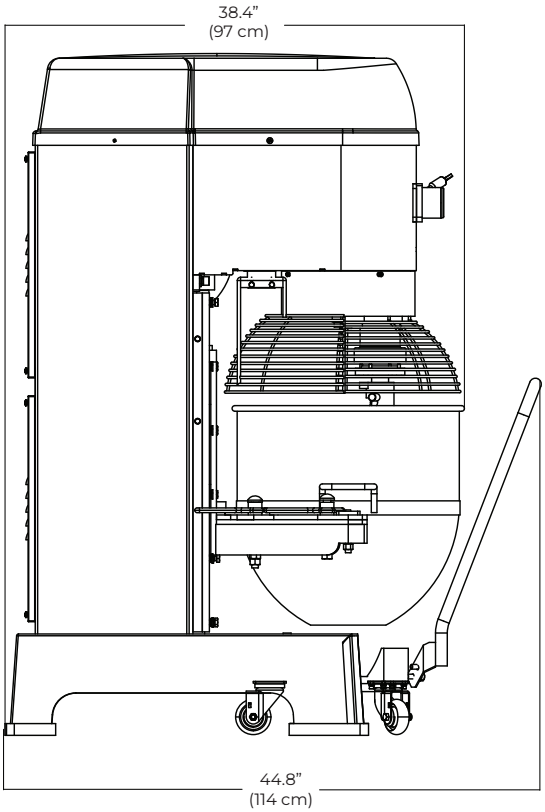

Babak Food Equipment
(604) 566-9747 · babakfoodequipment.com

Authorized Eurodib dealer · view the full Eurodib range